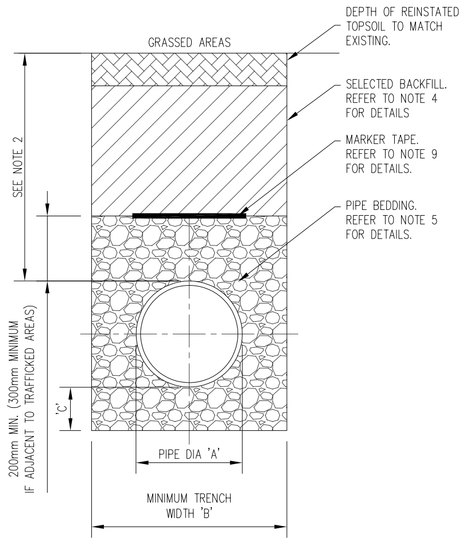

CROSS SECTION IN GRASSED AREAS
SCALE 1:20

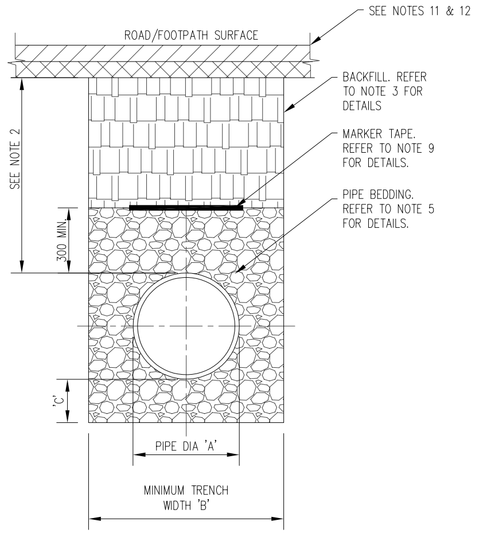

CROSS SECTION IN ROADWAYS
SCALE 1:20

DETAIL 01 – TRENCH BACKFILL AND BEDDING

PIPE DIAMETER 'A' (mm)	DEPTH OF BEDDING 'C' (mm)
≤ 200	150
≥ 250	200
PIPE DIAMETER 'A' (mm)	TRENCH WIDTH 'B' (mm)
≤ 80	SEE NOTE 10.
100	500
150	600
200	600
250	750
300	750
350	750
400	900
450	900

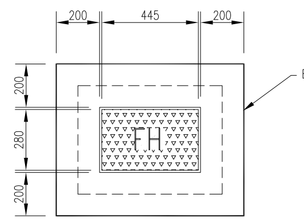

PLINTH DETAIL IN GRASS AREA
SCALE 1:20

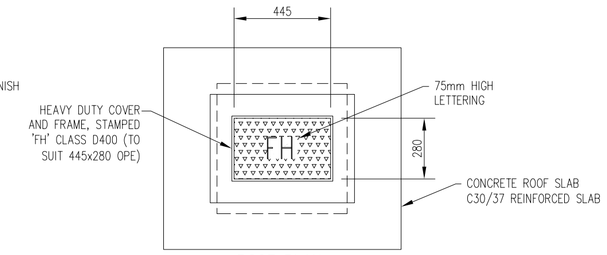

ROOF PLAN
SCALE 1:20

DIAMETER OF MAIN	UP TO 250 (mm)	250 TO 350 (mm)
DIAMETER OF BRANCH	80mm	100mm
BORE OF VALVE INLET	80mm	100mm

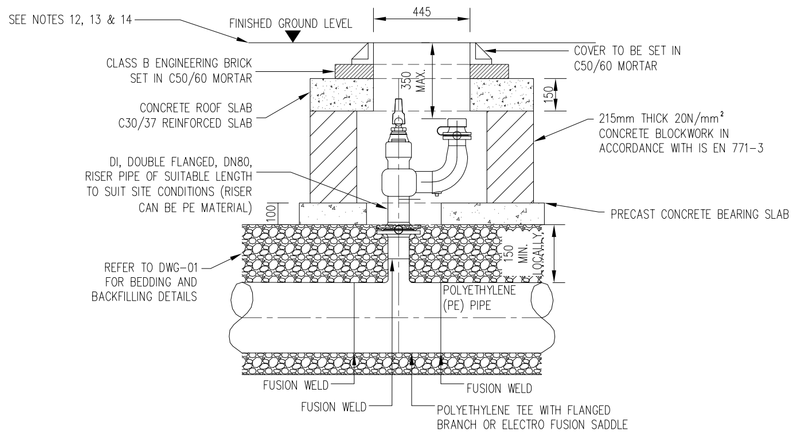

SECTION
SCALE 1:20

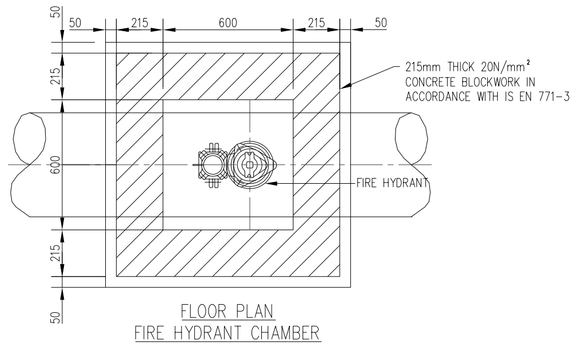

FLOOR PLAN
FIRE HYDRANT CHAMBER
(BLOCKWORK CONSTRUCTION)
SCALE 1:20

DETAIL 02 – ON-LINE HYDRANT FOR POLYETHYLENE (P.E.) PIPE

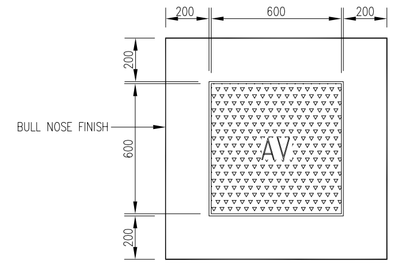

PLINTH DETAIL IN GRASS AREA
SCALE 1:20

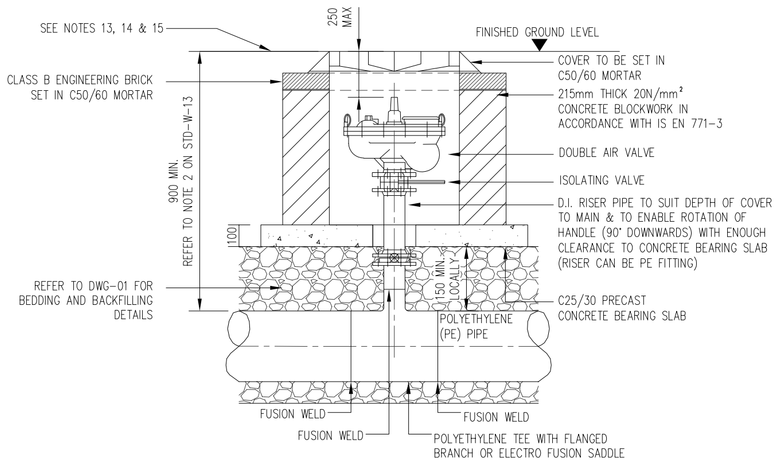

SECTION
SCALE 1:20

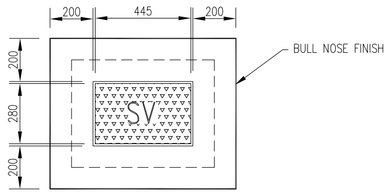

PLINTH DETAIL IN GRASS AREA
SCALE 1:20

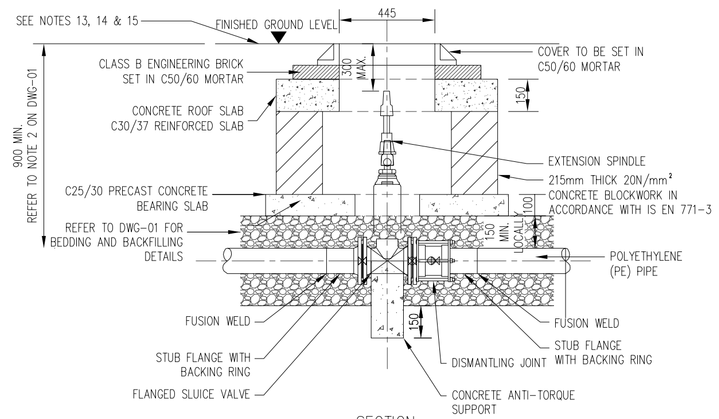

SECTION
SCALE 1:20

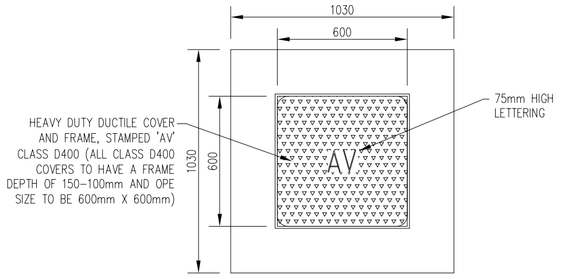

ROOF PLAN
SCALE 1:20

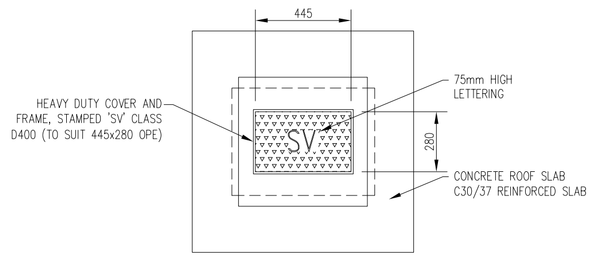

ROOF PLAN
SCALE 1:20

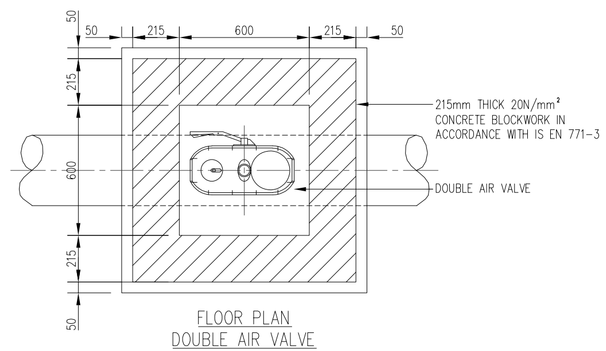

FLOOR PLAN
DOUBLE AIR VALVE
(BLOCKWORK CONSTRUCTION)
SCALE 1:20

DETAIL 03 – ON-LINE AIR VALVE FOR POLYETHYLENE (P.E.) PIPE

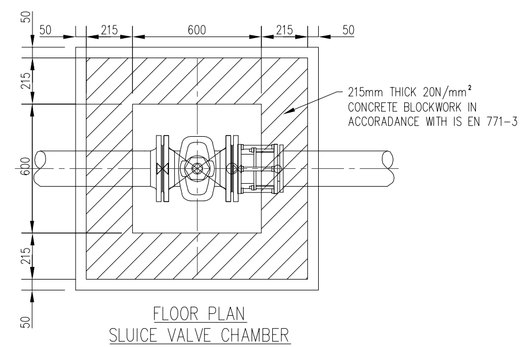

FLOOR PLAN
SLUICE VALVE CHAMBER
(BLOCKWORK CONSTRUCTION)
SCALE 1:20

DETAIL 04 –SLUICE VALVE FOR POLYETHYLENE (P.E.) PIPE (<350mm ø)

NOTES

GENERAL

1.) THESE DRAWINGS TO BE READ IN CONJUNCTION WITH ALL RELEVANT HAYES HIGGINS ENGINEERING DRAWINGS AND SPECIFICATIONS.

2.) DO NOT SCALE. USE FIGURED DIMENSIONS ONLY.

REV	DATE	DESCRIPTION	DWG BY	APPR. BY
P	07.05.2020	ISSUED FOR PLANNING	DW	LM

ISSUED
PLANNING

CLIENT
DUN LAOGHAIRE - RATHDOWN COUNTY COUNCIL

PROJECT NAME
APARTMENTS AT ST LAURENCE'S PARK

DRAWING NAME
IRISH WATER WATERMAIN DETAILS SHEET 1 OF 4

PROJECT No.
17D102

DRAWING No. 04
REVISION P
SCALE 1:200
DRAWN DATE 01.05.2020
CAD DRAWN BY DW
CHECKED BY LM
APPROVED BY DH

HAYES HIGGINS PARTNERSHIP
The Glass House, 11 Coke Lane
Smithfield, Dublin 7. Tel: 01 6612321
E-mail: admin@hayeshiggins.ie
Gas House Lane, Kilkenny. Tel: (056) 7764710
Email: info@hhp.ie

A1

© HAYES HIGGINS PARTNERSHIP