NOTES

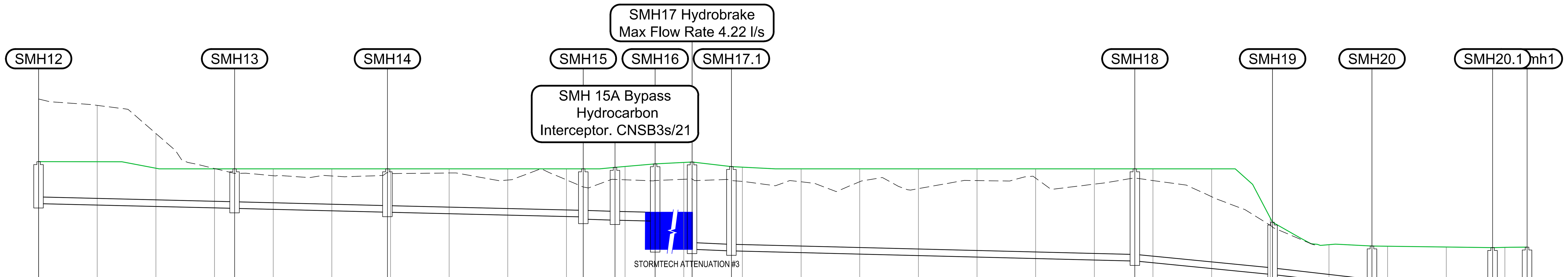

GROUND LEVEL	80.74	80.74	80.52	80.50	80.50	80.50	80.50	80.50	80.50	80.50	80.50	80.50	80.55	80.58	80.67	80.72	80.73	80.58	80.56	80.50	80.50	80.50	80.50	80.50	80.50	80.50	80.50	80.50	78.68	77.92	77.87	77.86	77.84	77.82	77.83
INVERT LEVEL	79.32	79.15	79.15	79.02	79.02	78.86	78.78	78.75	78.75	78.72	77.76	77.70	77.70	77.36	77.36	76.90	76.90	76.51	76.52	76.42	76.42	76.39													
CHAINAGE	00.00	33.42	59.47	92.86	98.27	105.12	111.41	118.12	186.90	210.38	227.34	247.90	253.78																						
GRADIENT	1:204	1:200	1:207	1:168	1:195		1:118	1:200	1:51	1:44	1:203	1:221																							
PIPE DIAMETER	∅225mm	∅225mm	∅225mm	∅300mm	∅300mm		∅225mm	∅225mm	∅225mm	∅225mm	∅225mm	∅225mm																							
PIPE MATERIAL																																			
BACKFILL & REINSTATEMENT BEDDING AND SURROUND																																			

LONGITUDINAL SECTION STORM SOUTH

V Scale: 1:100
H Scale: 1:500

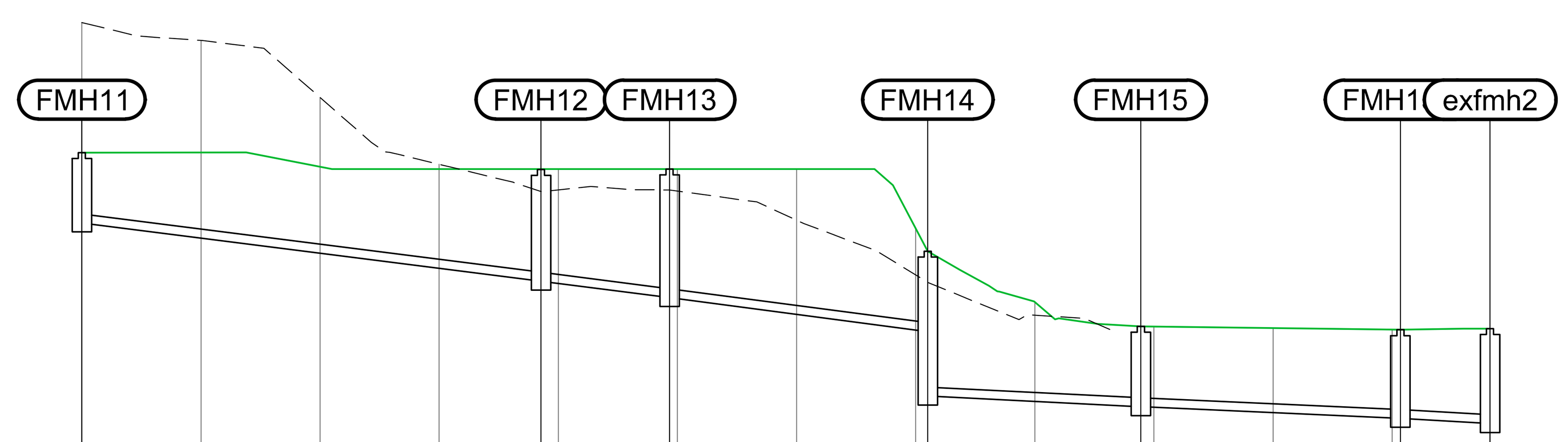

GROUND LEVEL	80.78	80.78	80.54	80.50	80.49	80.50	80.50	80.50	79.12	78.27	77.86	77.83	77.80	77.82
INVERT LEVEL	79.59	78.62	78.62	78.34	78.34	77.77	76.69	76.51	76.51	76.31	76.31	76.22		
CHAINAGE	00.00	38.54	49.34	71.01	88.90	110.69	118.22							
GRADIENT	1:39	1:39	1:38	1:100	1:111	1:85								
PIPE DIAMETER	∅150mm	∅150mm	∅150mm	∅150mm	∅150mm	∅150mm								
PIPE MATERIAL														
BACKFILL & REINSTATEMENT BEDDING AND SURROUND														

LONGITUDINAL SECTION FOUL SOUTH

V Scale: 1:100
H Scale: 1:500

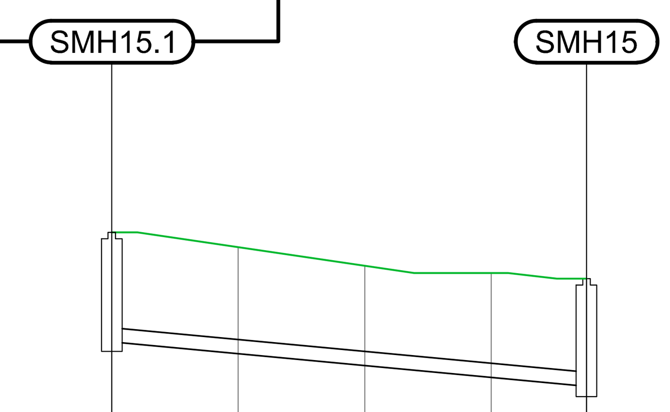

GROUND LEVEL	81.23	81.00	80.70	80.59	80.50
INVERT LEVEL	79.50	78.80			
CHAINAGE	00.00	37.53			
GRADIENT	1:53				
PIPE DIAMETER	∅225mm				
PIPE MATERIAL					
BACKFILL & REINSTATEMENT BEDDING AND SURROUND					

LONGITUDINAL SECTION SW SOUTH 15.1 - 15

V Scale: 1:100
H Scale: 1:500

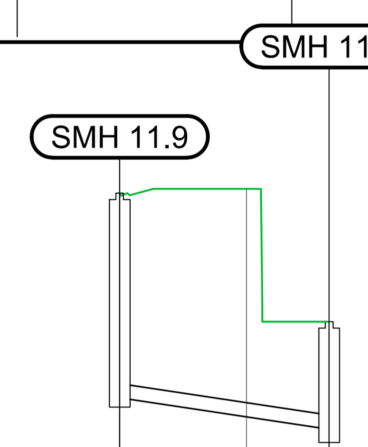

GROUND LEVEL	81.93	82.00	79.90
INVERT LEVEL	78.70	78.20	
CHAINAGE	00.00	16.54	
GRADIENT	1:33		
PIPE DIAMETER	∅225mm		
PIPE MATERIAL			
BACKFILL & REINSTATEMENT BEDDING AND SURROUND			

LONGITUDINAL SECTION SW NORTH 11.9 - 11.7

V Scale: 1:100
H Scale: 1:500

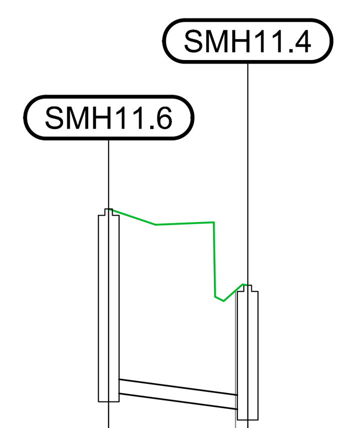

GROUND LEVEL	81.60	80.39	80.39
INVERT LEVEL	78.70	78.41	
CHAINAGE	00.00	10.98	
GRADIENT	1:38		
PIPE DIAMETER	∅225mm		
PIPE MATERIAL			
BACKFILL & REINSTATEMENT BEDDING AND SURROUND			

LONGITUDINAL SECTION SW NORTH 11.6-11.4

V Scale: 1:100
H Scale: 1:500

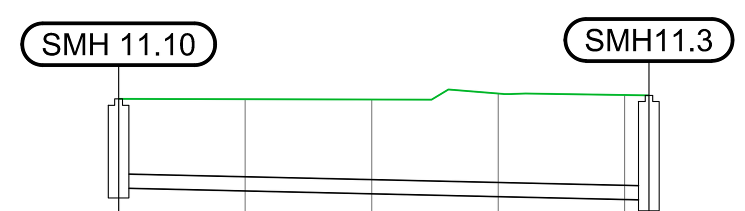

GROUND LEVEL	79.70	79.70	79.69	79.78	79.76	79.76
INVERT LEVEL	78.29	78.10				
CHAINAGE	00.00	41.91				
GRADIENT	1:221					
PIPE DIAMETER	∅225mm					
PIPE MATERIAL						
BACKFILL & REINSTATEMENT BEDDING AND SURROUND						

LONGITUDINAL SECTION SW NORTH 11.1 - 11.3

V Scale: 1:100
H Scale: 1:500

REV	DATE	DESCRIPTION	D	C	A
C	13.02.2019	ISSUED FOR PLANNING	CD	KMG	KMG

PLANNING

COPYRIGHT RESERVED - THIS DRAWING IS NOT TO BE USED FOR A PURPOSE OTHER THAN THAT FOR WHICH IT HAS BEEN ISSUED BY NICHOLAS O'DWYER LTD. NOR IS IT TO BE COPIED OR REPRODUCED IN ANY MANNER WITHOUT WRITTEN CONSENT.

NICHOLAS O'DWYER
Unit E4, Nutgrove Office Park,
Nutgrove Avenue, Dublin 14
T +353 1 296 9000
F +353 1 296 9001
E dublin@nodwyer.com
W www.nodwyer.com

CLIENT
DLRCC

PROJECT
BALLYOGAN COURT

TITLE
DRAINAGE LONGITUDINAL SECTIONS SHEET 2.

SCALES	DRAWN	CHECKED	APPROVED
1:500 @A1	C Doyle	KMG	KMG
	DATE 16.01.2018	DATE 17.01.2018	DATE 17.01.2018

DRAWING No. 30405-PP-05
REV C