Tree Experts in the Built Environment

John Morris Arboricultural Consultancy

Tree Risk Management | Trees, Planning & Development | Expert Witness | Arboricultural Clerk of Works | Government Support

Client: DBFL Consulting Engineers
Site: Dundrum Living Streets
Main Street
Dundrum

Date: 16th November 2026
Ref: 26-1030-04
Version: 2

ARBORICULTURAL IMPACT ASSESSMENT & METHOD STATEMENTS





John Morris Arboricultural Consultancy

DOCUMENT CONTROL SHEET

Originating Author:	Date:	Version	Notes:
JM	22.10.26	1	Original Document
Reviewed By:			
RC	22.10.26	1	Quality Control
Approved for Issue By:			
JM	22.10.26	1	Draft Document for Client
JM	16.11.26	2	Final Document for Client

Prepared by:

John Morris Arboricultural Consultancy Ltd
Executive Suites
Weavers Court
Belfast
BT12 5SH

+44 (0) 7830 793 487
info@johnmorristrees.com
www.johnmorristrees.com

Prepared for:

DBFL Consulting Engineers
Ormond House
Ormond Quay Upper
Dublin 7
D07 W704
Ireland

COPYRIGHT ©

The copyright of this document remains with John Morris Arboricultural Consultancy Ltd. Its contents must not be copied or reproduced in whole or in part for any purpose without the written consent of John Morris Arboricultural Consultancy Ltd.

Purpose of Document

This report provides an assessment of trees on land on Dundrum Main Street, in accordance with BS5837:2012 *Trees in relation to design, demolition and construction – Recommendations*.

It provides an overview of the constraints posed by trees on or within influencing distance of the site, and assesses the impacts of the development proposal to those trees.

It includes:

- A **Tree Schedule** that provides information for each tree;
- A **Tree Constraints Plan** that illustrates the location and constraints posed by trees;
- An **Arboricultural Impact Assessment** that considers the impacts of the development proposal to those trees, including proposals for arboricultural mitigation and improvements;
- An **Arboricultural Method Statement** that outlines how retained trees will be protected during construction, and;
- A **Tree Impact & Protection Plan** that illustrates the impact of the proposal upon trees and protection measures that should be adopted during construction.

The information contained within this report is provided to allow Dún Laoghaire-Rathdown County Council to assess tree related issues associated with the development proposal.

Executive Summary

The proposal is for a new Active Travel Scheme comprising a cycle lane, and footpath and public realm improvements along Dundrum Main Street.

There are two early mature and one semi-mature ash street trees and some areas of vegetation along the proposed route.

The proposal will require removal of the three street trees and a small area of vegetation from an island verge within the footpath.

It is understood there will be new street trees planted along the route to replace those are to be removed.

The following measures are required to ensure the protection of retained trees during construction:

- Tree protective fencing and barriers

CONTENTS

1. INTRODUCTION 6

Instruction 6
Scope 6
Site 6

2. TREE SURVEY 6

Site Visit 6
Description of Trees 6

3. ARBORICULTURAL PRINCIPLES 7

Trees and Development 7
Below Ground Constraints 7
Impacts of Construction & Development 7
Root Protection Areas 8
Above Ground Constraints 8

4. PLANNING POLICY, STATUTORY CONSIDERATIONS & TREE LEGISLATION 8

Planning Policy 8
Dún Laoghaire-Rathdown County Council Development Plan (2022-2028) 9
Tree Preservation Orders & Conservation Areas 9
Special Amenity Area Orders 9
Felling Licences 10
Wildlife 10

5. ARBORICULTURAL IMPACT ASSESSMENT 11

Development Proposal 11
Tree Removals & Pruning 11
The Impact 11
Mitigation & Improvements 11

6. ARBORICULTURAL METHOD STATEMENTS 12

Purpose 12
Pre Commencement Meeting 12
Key Responsibilities 12
Tree Protective Fencing 12
Site Compounds & Facilities 13
Site Cranes, Piling Rigs and Machinery 13
Pollution Control 13
Temporary Ground Protection 13
Excavations and Removal of Existing Surfaces 14
Upgrading Existing Surfaces 14
Installation of Services 15
Installation of Railings, Lighting Columns or Street Furniture 15

SOFT LANDSCAPING 16

7. ABOUT THE AUTHOR & LIMITATIONS 16

AUTHORS QUALIFICATIONS & EXPERIENCE 16
LIMITATIONS 16

APPENDICES

APPENDIX 1: TREE SURVEY CRITERIA (BS5837:2012) 18
BS5837:2012 ASSESSMENT CRITERIA & CASCADE CHART 19
APPENDIX 2 – CALCULATION OF THE ROOT PROTECTION AREA 20
APPENDIX 3 – EXAMPLE OF TREE PROTECTIVE FENCING 22
APPENDIX 4 – EXAMPLE OF TREE PROTECTIVE SIGNS 24
APPENDIX 5 – EXAMPLE OF TEMPORARY GROUND PROTECTION 25

ATTACHMENTS

DOCUMENT TITLE	DOCUMENT REFERENCE
TREE SCHEDULE	24-599-01
TREE CONSTRAINTS PLAN	24-599-02
TREE IMPACT & PROTECTION PLAN	24-599-03

1. INTRODUCTION

Instruction

1.1. Instruction was received from DBFL Consulting Engineers on 8th September 2026 to undertake a tree survey and prepare an arboricultural report to in connection with a planning application for a new cycle lane and footpath and public realm improvements along Dundrum Main Street.

Scope

1.2. The survey has been carried out in accordance with BS5837:2012 *Trees in relation to design, demolition and construction – Recommendations.*

1.3. The information collected during the survey has been used to prepare a report in connection with a planning application.

Site

The site is located along Dundrum Main Street.

2. TREE SURVEY

Site Visit

2.1. The tree survey was undertaken on 17th September 2026.

2.2. Details of the survey methodology and assessment criteria can be found in Appendix 1.

2.3. The survey data can be found on the Tree Schedule (Ref: 26-1030-01) and Tree Constraints Plan (Ref: 26-1030-02) attached to this report.

2.4. The tree survey considered all trees that have the potential to be impacted by the proposal including those outside the application area, but within influencing distance.

2.5. The above ground constraints posed by canopy spread are plotted as a continuous line around the tree and shaded in the corresponding BS5837 retention category colour, whilst the below ground constraints posed by the Root Protection Area (RPA) have been plotted as a continuous magenta line with the text RPA inscribed.

Description of Trees

2.6. There are two early mature and one semi-mature ash street trees and some areas of vegetation along the proposed route.

2.7. A summary assessment of the tree quality is contained in Table 1.

Table 1. Overview assessment of tree quality by BS5837 retention categroy.

	Category A	Category B	Category C	Category U	Total
Trees	0	3	3	0	**6**

2.8. A summary of the tree population age classification is contained in Table 2.

Table 2. Summary of age class.

	Young	Semi-mature	Early mature	Mature	Over Mature	Ancient or Veteran	Dead
Trees	0	4	2	0	**0**	**0**	**0**

3. ARBORICULTURAL PRINCIPLES

Trees and Development

3.1. Trees provide a multitude of economic, environmental and social benefits to individuals and communities including (but not limited) to visual amenity and landscape value, ecosystem services and habitats for local wildlife. Trees can also hold historic and cultural importance by providing links to the past that create a sense of place and belonging.

3.2. They are living, self-optimising, mechanical organisms that grow in and react to the environment in which they are located and are capable of being wounded or infected by objects or other organisms that can cause a decline in health or result in death.

3.3. Development proposals that will impact trees should consider the value and contribution made by those trees, the impacts of development activity upon their health and an assessment of future conflicts that may arise between trees and the development proposal.

Below Ground Constraints

3.4. Soils contain organic and mineral material, air and water that provides a medium essential for root growth. The physical properties of soils including texture, porosity and bulk density can greatly impact the availability of water, nutrients and oxygen in the soil available to support the function and growth of tree roots. Protection of the soil environment in which trees grow is therefore essential to ensure tree vitality.

3.5. Tree roots provide support and anchorage and allow the uptake and transport of water, nutrients and oxygen for tree function and growth. Roots are commonly found in the upper 600-1000mm of soil, however depth can vary significantly depending on soil and local site conditions. Typically, tree root systems comprise a network of lateral roots that provide structural support and smaller fibrous roots that function in the uptake of water, nutrients and oxygen. Protection of the tree roots is therefore essential to ensure tree vitality.

Impacts of Construction & Development

3.6. The processes of construction including the movement of machinery and equipment near trees can cause soil compaction that can starve roots of oxygen and water, resulting in tree decline or death. Increasing ground levels near trees can cause similar impacts, whilst belowground soil excavations can damage root bark or lead to root severance and impair structural stability. Further impacts include (but are not limited to) contamination of soils by toxic substances such as cement or chemicals and root desiccation due to inadequate protection during exposure.

Root Protection Areas

3.7. In accordance with BS5837, the Root Protection Area (RPA) indicates the notional minimum area of ground around a tree deemed to contain sufficient roots and rooting volume to avoid adverse physiological or structural impairment and to support future tree function, growth and health.

3.8. The RPA is calculated in accordance with Section 4.6 of BS5837 and is summarised in Appendix 2.

3.9. The RPA is plotted as a continuous circle centred on the base of the stem, however where pre-existing site conditions such as the presence of built structures, changes in topography, soil type and structure or past management are likely to act as barriers, or alter normal distribution, BS5837 allows modifications to the shape of the RPA can be made based upon sound arboricultural assessment.

3.10. The default position should be that no development works occur inside RPAs, however in accordance with BS5837 when there is an overriding justification, it may be appropriate to implement specialist methods of construction or technical solutions that will reduce or eliminate the impact to roots and soil environments.

3.11. Additionally, where an area of RPA is lost, it should be demonstrated that the tree can remain viable with the area lost from encroachment compensated elsewhere contiguous with its RPA, based on the species, age, condition and past management of the tree, pre-existing site conditions and nature of operations proposed is undertaken.

Above Ground Constraints

3.12. Tree stems and crowns can restrict the availability of space on a development site that may result in conflicts between trees and the new built environment. The design and layout of a site should take into consideration the presence of tree canopies, as well as individual species characteristics and future growth requirements in order to create a harmonious relationship between trees and the new built environment.

4. PLANNING POLICY, STATUTORY CONSIDERATIONS & TREE LEGISLATION

Planning Policy

4.1. The National Planning Framework 'Project Ireland 2040' and National Development Plan (2021-2030) underpin planning policy across Ireland. These documents recognise the need to manage future growth in a planned, productive and sustainable way.

4.2. At the heart of Green Infrastructure Planning is to protect, preserve and enhance national capital by:

> *"protecting and valuing important and vulnerable habitats, landscapes, natural heritage and green spaces".*

Dún Laoghaire-Rathdown County Council Development Plan (2022-2028)

4.1. The site is within the land boundary of Dún Laoghaire-Rathdown County Council (DLRCC), which has a statutory obligation to ensure that provision is made for the protection of trees, woodlands and hedgerows under the Local Government Planning and Development Act (2000), through implementation of a Local Development Plan. The current DLLRCC plan is 'Dún Laoghaire-Rathdown County Council Development Plan (2022-2028), with guidance on trees, woodlands and hedgerows provided throughout the plan and also specifically in the following policy objectives:

Policy Objective PHP37: *Public Realm Design*
Policy Objective GIB1: *Green Infrastructure Strategy*
Policy Objective GIB18: *Protection of Natural Heritage and the Environment*
Policy Objective GI22: *Non-Designated Areas of Biodiversity Importance*
Policy Objective OSR7: *Trees, Woodland and Forestry*
Policy Objective OSR8: *Greenways and Blueways Network*

4.2. The Dún Laoghaire-Rathdown County Council Development Plan (2022-2028) and Tree Strategy for the County – 'Dún Laoghaire-Rathdown TREES 2011-2015' should influence design proposals by ensuring that the existing trees are considered in the context of planning policy and retained where appropriate.

Tree Preservation Orders & Conservation Areas

4.3. Tree Preservation Orders (TPOs) may be made under Section 45 of the Local Government (Planning and Development) Act, 1963 and subsequent acts. Part XIII of the Planning and Development Act 2000 sets out the provisions for TPOs. A TPO can be made if it appears to the planning authority to be desirable and appropriate in the interest of amenity or the environment. A TPO can apply to a tree, trees, group of trees or woodland.

4.4. The principle effect of a TPO is to prohibit the cutting down, topping, lopping or wilful destruction of trees without the planning authority's consent. The order can also require the owner and occupier of the land subject to the order to enter into an agreement with the planning authority to ensure the proper management of the tree, trees or woodland.

4.5. A review of the Dún Laoghaire-Rathdown County Council Development Plan (2022-2028) indicates that trees are not subject to a Tree Preservation Order.

Special Amenity Area Orders

4.6. A National Special Amenity Area is a designation for a landscape of national importance for its aesthetic/recreational value.

4.7. Planning authorities are empowered (under section 202 of the Planning and Development Act 2000), to make a Special Amenity Area Order (SAAO) for reasons of outstanding natural beauty or its special recreational value and having regard to any benefits for nature conservation. The purpose is to preserve/enhance landscape character and to prevent/limit development.

4.8. A review of Dún Laoghaire-Rathdown County Council Development Plan (2022-2028) indicates the site is not within a National Special Amenity Area.

Felling Licences

4.9. It is an offence for any person to uproot or cut down any tree unless the owner has obtained permission in the form of a felling licence from the Forest Service, with the exception of the following scenarios (under section 19 of the Forestry Act 2014):

- A tree in an urban area. (An urban area is an area that is comprised of a city, town or borough specified in Part 2 of Schedule 5and in Schedule 6 of the Local Government Act 2001, before the enactment of the Local Government Reform Act 2014 (this act dissolved Town Councils, however, the old boundaries of these areas are still considered as urban for the purpose of the Forestry Act 2014).
- A tree within 30 metres of a building (other than a wall or temporary structure) but excluding any building built after the trees were planted.
- A tree less than 5 years of age that came about through natural regeneration and removed from a field as part of the normal maintenance of agricultural land (but not where the tree is standing in a hedgerow).
- A tree uprooted in a nursery for the purpose of transplantation.
- A tree of the willow or poplar species planted and maintained solely for fuel under a
- short rotation coppice.
- A tree outside a forest within 10 metres of a public road and which, in the opinion of the owner (being an opinion formed on reasonable grounds), is dangerous to persons using the public road on account of its age or condition.
- A tree outside a forest, the removal of which is specified in a grant of planning permission, providing it was indicated on the lodged plans as being planned for removal as part of the application
- A tree outside a forest of the hawthorn or blackthorn species growing in a hedge.
- A tree outside a forest in a hedgerow and felled for the purposes of its trimming the hedge providing that the tree does not exceed 20 centimetres diameter at 1.3 metres above ground level.
- Agricultural holdings can fell a limited small number of trees not exceeding 3 cubic metres.
- The maximum number of trees permitted to be felled under that exemption per year is 4 trees (12 cubic metres)
- Outside a forest, apple, pear, plum, or damson species are exempt from the need for a felling license.

Wildlife

4.10. The cutting of hedges is prohibited during the period 1st April to 31st August every year with limited exceptions under the Wildlife Acts 1976-2008.

5. ARBORICULTURAL IMPACT ASSESSMENT

Development Proposal

5.1. The proposal is for a new Active Travel Scheme comprising a cycle lane, and footpath and public realm improvements along Dundrum Main Street.

5.2. The Dundrum Living Streets project was initially considered as a wider study area during the options assessment and scheme development process. This wider consideration informed the overall approach to public realm and active travel improvements within Dundrum. The scheme now being brought forward through the Part 8 process represents Phase 1 of the wider Dundrum Living Streets project and comprises a clearly defined and independently deliverable package of works. The remaining elements of the wider project are intended to be progressed separately as Phase 2, subject to further design development, assessment and the appropriate statutory approval process.

5.3. Notwithstanding this phased approach to delivery, the current scheme has not been considered in isolation. The relationship between Phase 1 and the wider Living Streets project has been recognised throughout the assessment process, with potential cumulative and in-combination effects considered, where relevant, as part of the environmental assessments accompanying the current Part 8 application.

Tree Removals & Pruning

5.4. Tree removals and pruning have been limited to that which is necessary and unavoidable to allow the development proposal to be implemented, with consideration given to species attributes, the tolerance of individual trees to disturbance, and to the presence of surrounding trees and features of the site which may have an influence on retained trees.

5.5. The pruning of trees may be required for reasons of good arboricultural practice or management to promote tree health and longevity, to remove hazards for reasons of health and safety, or to limit the impacts of the development proposal upon trees where incursions into RPAs are unavoidable.

The Impact

5.6. The proposal will require removal of the three street trees and a small area of vegetation from an island verge within the footpath.

5.7. Although the ash trees proposed for removal are currently in fair condition and show no signs of Ash Dieback, DLR Parks Department feels that the disease poses a potential risk to their long-term health has recommended their removal and replacement with alternative tree species.

Mitigation & Improvements

5.8. It is understood there will be new street trees planted along the route to replace those are to be removed.

6. ARBORICULTURAL METHOD STATEMENTS

Purpose

6.1. The purpose of this statement is to provide a system of working to ensure retained trees are protected at all times during construction. It should be read in conjunction with the Tree Impact & Protection Plan (TIPP) attached to this report.

6.2. A copy of this report must be made permanently available for the duration of the development.

It can be:

- Included in tender documents to identify and quantify tree protection and management requirements;
- Used to plan timing of site operations to minimise the impact upon trees, and;
- Referenced on site for practical guidance on how to protect trees.

6.3. The compliance of arboricultural method statements is a recommended as a condition of planning and is necessary to ensure the protection and vitality of retained trees.

Pre Commencement Meeting

6.4. A pre-commencement meeting will be held prior to commencement of any demolition or construction works on site. The pre-commencement meeting may require the attendance of:

- The Main Works Contractor;
- Landscape Architect;
- Structural/Civil Engineer;
- Project Arboriculturist; and
- Any other parties as required.

6.5. The purpose of this meeting will be to agree the details of the tree protection measures and ensure that all aspects of tree protection are understood. The Project Arboriculturist and Main Works Contractor will agree and mark the location of the tree protective fencing and temporary ground protection and any other specific tree protection measures, as required.

Key Responsibilities

6.6. It is the responsibility of the main contractor to ensure that all site personnel fully understand the protection measures on the site, that tree protection measures are adhered to at all times, and that the project arboriculturist is contacted if there are any issues related to trees.

Tree Protective Fencing

6.7. A protective fence will be erected around retained trees, prior to the commencement of materials or machinery being brought onto site, removal of soil or any form of construction. The area within this fencing will form the construction exclusion zone (CEZ) and it will be afforded protection at all times. No works will be undertaken within this zone that causes compaction to the soil, severance of tree roots or damage to tree canopies.

6.8. The fence is to be sited in accordance with the TIPP attached to this report.

6.9. Details of the minimum distance for fencing from trees can be found in the Tree Schedule attached to this report.

6.10. The precise form of fencing can vary provided it is fit for purpose and prevents damaging activities within the CEZ. For a proposal of this nature the Heras 151 system of fencing will afford the necessary level of protection (Appendix 3).

6.11. The fence will have signs attached to it stating that it defines a CEZ and that no works are permitted beyond it.

6.12. An example of a tree protection sign is provided in Appendix 4.

6.13. The protective fencing may only be removed following completion of all construction works.

6.14. The following principles will be adopted by site personnel within the CEZ during construction, to ensure protection of retained trees:

- No level changes.
- No excavations.
- No fires.
- No use of herbicides.
- No storage of materials, machinery or access for construction workers.

Site Compounds & Facilities

6.15. Site compounds and facilities will be located outside of all RPAs and CEZs as identified on the TIPP.

Site Cranes, Piling Rigs and Machinery

6.16. The location of all site cranes, piling rigs and other machinery should be sited outside of RPAs to avoid soil compaction.

Pollution Control

6.17. Any storage or mixing station located outside of the construction exclusion zone will be located in a place that minimises the risk of contaminated runoff entering to prevent adverse physiological impacts on trees that may result from contact with rooting environments. This may be achieved by using a non-permeable membrane on the ground, surrounded by sandbags or sawdust to contain any spillage.

Temporary Ground Protection

6.18. Where it is not practical to protect RPAs by use of protective fencing, BS5837 allows for the fencing to be set back and the soil shielded by ground protection. A range of methods can be used including retaining existing hard surfaces or structures that already protect the soil, installing new temporary surfaces, or a combination of both. Whatever the choice of method, the end result must be that the underlying soil remains undisturbed and retains the capacity to support existing and new roots.

6.19. If fences are to be set back on a temporary the following specifications are recommended for use as temporary ground protection to protect roots and soil.

6.20. For pedestrian traffic, a plywood board with a minimum thickness of 40mm should be laid on a minimum of 100mm deep woodchip, with geotextile membrane beneath.

6.21. For small plant machinery with a gross weight of up to 2 tonne, interlinking aluminium or composite tracks with sufficient load bearing capacity should be laid on a minimum of 150mm deep woodchip, with geotextile membrane beneath.

6.22. For heavy machinery with a gross weight of up to 3.5tonne, interlinking aluminium or composite track with sufficient load bearing capacity should be laid over a minimum layer of 200mm deep woodchip, with a geotextile membrane beneath.

6.23. Any temporary protective surfaces must remain in place until all construction activity is finished.

6.24. Upon completion of construction works, the temporary ground protective measures should be removed working backwards from on top of the system. This will need to be done carefully ensure that there is no excavation or compaction of the original surface or change in ground levels.

6.25. Once this material has been removed vehicular access to this part of the site will not be permitted.

6.26. The location of where temporary ground protection is to be located and at what stage of development is illustrated on the TIPP attached to this report.

Excavations and Removal of Existing Surfaces

6.27. All excavation must be carried out carefully using spades, forks and trowels, taking care not to damage the bark and wood of any roots. Specialist tools for removing soil around roots using compressed air such as an Air Spade may be an appropriate alternative to hand digging, if available.

6.28. All soil removal must be undertaken with care to minimise the disturbance of roots beyond the immediate area of excavation. Where possible, flexible clumps of small roots, including fibrous roots, should be retained if they can be displaced temporarily or permanently beyond the excavation without damage.

6.29. If digging by hand, a fork should be used to loosen the soil and help locate any substantial roots. Once the roots have been located the trowel should be used to clear the soil away from them without damaging the bark. Exposed roots that are to be removed should be cut cleanly with a sharp saw or secateurs 100-200mm behind the final face of the excavation.

6.30. Roots temporarily exposed must be protected from direct sunlight, drying out and extreme temperatures by appropriate covering. Roots greater than 25mm in diameter should only be cut in exceptional circumstances. Roots greater than 100mm in diameter should only be cut after consultation with the project arboriculturist.

Upgrading Existing Surfaces

6.31. Where upgrading of existing hard surfaces is required, the preferred option will be to leave the surface in place and install the new surface specification on top.

6.32. If the retained surface is impermeable, it may be appropriate to remove or puncture sections to create a more favourable environment for roots beneath, before the new surface is laid, through consultation with the project arboriculturist.

6.33. Where the existing surface is to be removed or upgraded, the surface layer should be excavated down the existing subbase and the new surface specification installed on top, to prevent any damage to roots beneath.

6.34. It is recommended that where possible, new and upgraded hard surfaces should be porous (e.g. permeable brick paving, porous resin bound aggregate or tarmac) to allow the flow or water and oxygen to roots. Wet concrete should only be poured if an impermeable geotextile fabric has first been installed to prevent soil contamination from toxic leachate.

6.35. New surfaces and upgraded surfaces should be set back from the base of stems by a minimum of 500mm to allow space for future growth and minimise the risk of distortion with new surface.

Installation of Services

6.36. All services and utilities should be installed within existing service routes and where possible outside of RPAs.

6.37. Where installation of utilities or services is required within RPAs, working practices will be adopted in accordance with the National Joint Utilities (NJUG) 10, Vol 4, Issue 2, 2007 'Guidelines for the Planning, Installation and Maintenance of Utility Apparatus in Proximity to Trees'.

6.38. In accordance with 4.1.3 of NJUG 10 2007, acceptable techniques in order of preference include:

6.39. Trenchless; b) Broken Trench; and c) Continuous Trench. Trenchless methods involve the use of thrust boring machinery, whilst broken and continuous trench methods require that excavations within RPAs are carried out using hand tools only.

6.40. For a proposal of this nature, broken or continuous trench methods are the most appropriate and should be undertaken as per NJUG 10, to prevent any damage to tree roots or disruption to soil rooting environments.

Installation of Railings, Lighting Columns or Street Furniture

6.41. The erection of a new railings, lighting columns or street furniture will require 'hand-digging' in the location where any foundations or posts are required within RPAs, to prevent damage to tree roots.

6.42. Any soil removal during excavations must be undertaken with care to minimise root disturbance and avoid any damage to root bark.

6.43. Exposed roots that are to be removed should be cut cleanly with a sharp saw or secateurs 10-20mm behind the final face of the excavation.

6.44. Roots greater than 25mm diameter should only be cut in exceptional circumstances and following approval by the project arboriculturist.

6.45. Fibrous clumps of roots must be retained where possible, with any exposed roots protected from desiccation by covering them with a damp hessian sack or damp sharp sand (**builders' sand must not be used).**

6.46. Prior to backfilling, roots must be surrounded with topsoil or sharp sand before the excavated earth is replaced. The soil must be free of contaminates and any foreign objects that may be potentially harmful to roots.

Soft Landscaping

6.47. To avoid damage to existing tree roots and prevent soil compact, any machinery used to remove existing surfaces and ground vegetation for purposes of soft landscaping (e.g. seeding new lawns or laying turf) should be sited outside of RPAs. If this is not possible, hand tools must be used.

6.48. The removal of the surface layer within RPAs must not exceed 50mm, to prevent exposure and damage of tree roots beneath.

6.49. Soft landscaping works must not involve raising or lowering of the existing ground level within any RPA as this can starve roots of oxygen and cause irreversible physiological damage to trees.

6.50. The use of rotavators within RPAs is prohibited.

6.51. Any level changes outside RPAs must be graded to marry existing soil levels within RPAs.

7. ABOUT THE AUTHOR & LIMITATIONS

Authors Qualifications & Experience

7.1. This report has been written by John Morris. John has a First Class BSc (Hons) in Housing (Ulster University) and a Post Graduate Diploma (UK NQF Level 7) in Arboriculture & Urban Forestry (Myerscough College & University of Central Lancashire). John holds the International Society of Arboriculture (ISA) Tree Risk Assessment Qualification (TRAQ), is a Professional member of the Arboricultural Association (AA) and Associate member of the Institute of Chartered Foresters (ICF).

Limitations

7.2. This report is for planning purposes and is not a detailed assessment of the health and condition of trees, however where defects have been identified works have been recommended to ensure site safety.

7.3. This report does not take responsibility for the effects of extreme weather conditions, vandalism, accidents or any works to trees that occur without the authors knowledge, or that are not recommended within this report.

7.4. Tools used during the assessment have been limited to a sounding mallet, probe or binoculars. No invasive or diagnostic equipment has been used, nor have any aerial inspections, belowground root investigations, or soil, leaf or root samples been taken for further testing or analysis.

7.5. Trees were assessed on 17th September 2026 and the information gathered during the survey pertains to that moment in time. The observations within this report will remain valid for two years from the date of inspection. It is recommended that trees are inspected again within two years of the date of this report to assess what works are required for reasons of good arboricultural management and to enable the client to manage their legal reasonability in terms of tree risk management.

7.6. The location of trees places reliance on the accuracy of the topographical survey unless otherwise caveated within the report.

7.7. All works recommendation as a result of the survey should be undertaken by a suitably qualified and insured arborist in accordance with BS3998:2020 *Tree Works – Recommendations* to prevent any structural or physiological impairment to trees.

Appendix 1: Tree Survey Criteria (BS5837:2012)

The assessment of the trees has been carried out in accordance with the guidance provided in Annexe C of BS5837, which requires that any tree on or influencing distance of the site with a stem diameter of over 75mm at 1.5m above ground level be recorded.

Stem diameter measurements were taken using a girthing tape or Biltmore stick, and in accordance with Annexe D of BS5837.

Height, crown spread, and canopy clearance measurements are recorded in accordance with the measurement convention detailed in paragraph 4.4.2.6 of BS5837.

The trees are categorised in an order defined in **Table 1** of BS5837, a copy of which can be seen below in **Figure 1**, but which can be summarised as:

- **Category A** Trees of high quality and value in such a condition as to be able to make a substantial contribution for a minimum of 40 years.
- **Category B** Trees of moderate quality and value in such a condition as to make a significant contribution for a minimum 20 years.
- **Category C** Trees of low quality and value currently in adequate condition and able to remain until new planting can be established with a minimum useful life expectancy of 10 years, and young trees with a stem diameter less than 150mm.
- **Category U** Trees in poor structural condition or physiological decline that cannot be realistically retained in the context of current land use for more than 10 years.

Further subcategories 1-3 indicate the area(s) in which a tree or group retention value lies.

- Mainly arboricultural.
- Mainly landscape.
- Mainly cultural, including conservation.

Table 1 **Cascade chart for tree quality assessment**

Category and definition	Criteria (including subcategories where appropriate)			Identification on plan
Trees unsuitable for retention (see Note)				
Category U Those in such a condition that they cannot realistically be retained as living trees in the context of the current land use for longer than 10 years	• Trees that have a serious, irremediable, structural defect, such that their early loss is expected due to collapse, including those that will become unviable after removal of other category U trees (e.g. where, for whatever reason, the loss of companion shelter cannot be mitigated by pruning) • Trees that are dead or are showing signs of significant, immediate, and irreversible overall decline • Trees infected with pathogens of significance to the health and/or safety of other trees nearby, or very low quality trees suppressing adjacent trees of better quality *NOTE Category U trees can have existing or potential conservation value which it might be desirable to preserve; see **4.5.7**.*			See Table 2
	1 Mainly arboricultural qualities	**2 Mainly landscape qualities**	**3 Mainly cultural values, including conservation**	
Trees to be considered for retention				
Category A **Trees of high quality** with an estimated remaining life expectancy of at least 40 years	Trees that are particularly good examples of their species, especially if rare or unusual; or those that are essential components of groups or formal or semi-formal arboricultural features (e.g. the dominant and/or principal trees within an avenue)	Trees, groups or woodlands of particular visual importance as arboricultural and/or landscape features	Trees, groups or woodlands of significant conservation, historical, commemorative or other value (e.g. veteran trees or wood-pasture)	See Table 2
Category B **Trees of moderate quality** with an estimated remaining life expectancy of at least 20 years	Trees that might be included in category A, but are downgraded because of impaired condition (e.g. presence of significant though remediable defects, including unsympathetic past management and storm damage), such that they are unlikely to be suitable for retention for beyond 40 years; or trees lacking the special quality necessary to merit the category A designation	Trees present in numbers, usually growing as groups or woodlands, such that they attract a higher collective rating than they might as individuals; or trees occurring as collectives but situated so as to make little visual contribution to the wider locality	Trees with material conservation or other cultural value	See Table 2
Category C **Trees of low quality** with an estimated remaining life expectancy of at least 10 years, or young trees with a stem diameter below 150 mm	Unremarkable trees of very limited merit or such impaired condition that they do not qualify in higher categories	Trees present in groups or woodlands, but without this conferring on them significantly greater collective landscape value; and/or trees offering low or only temporary/transient landscape benefits	Trees with no material conservation or other cultural value	See Table 2

John Morris Arboricultural Consultancy

Appendix 2 – Calculation of the Root Protection Area

Circle Radius

The circle radius has been calculated by obtaining the stem diameter (measured at 1.5m above the ground) in millimetres and multiplying it by 12. Where the tree is multi-stemmed, an average stem diameter is calculated by the following formula specified in section 4.6.1 (a) & (b) of BS5837.

For trees with two to five stems, the combined stem diameter should be calculated as follows:

$$\sqrt{(\text{stem diameter 1})^2 + (\text{stem diameter 2})^2 \ldots + (\text{stem diameter 5})^2}$$

For trees with more than five stems (not illustrated in Annex C), the combined stem diameter should be calculated as follows:

$$\sqrt{(\text{mean stem diameter})^2 \times \text{number of stems}}$$

This total is then divided by 1000 to provide a circle radius in metres.

RPA Areas

The RPA has been assessed according to the recommendations set out in section 4.6 of BS5837. It is calculated by multiplying the radius squared by 3.142 (π).

Length of sides of a square

Section 5.5.3 of BS5837 recommends that the ground protection and barriers should be shown as a polygon surrounding the stem of the tree. With a circle, the distance from the edge of the circle to the centre will remain constant, but with a square, the distance from the centre of the tree to the sides of the square is less than the distance to the corner of the square. The area of the square must remain the same as the area of the circle. In order to ensure that it is
the case, the length of side of the square is calculated at the square root of the RPA area.

Minimum barrier distance

This is the closest point that a side of the square can be to the centre of the tree.

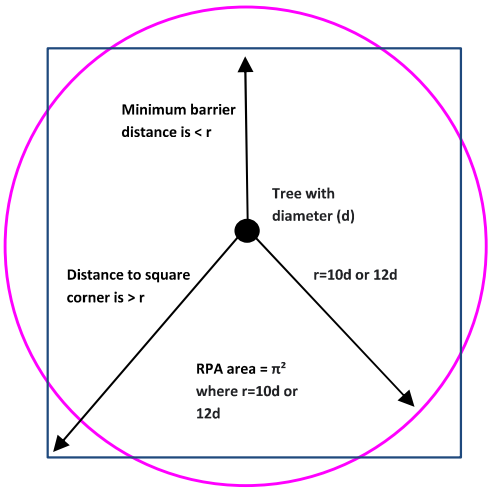

Figure 1. Illustration of area calculations and minimum barrier distances

Figure 1 illustrates the differences between a square and a circle in area. Where the distance from the centre of the tree to the corner of the square is greater than the radius of the circle (r), but the distance from the centre of the tree to the side of the square is greater than the radius of the circle (r), the total area will remain the same. The minimum barrier distance from the tree is calculated by taking the length of the side and dividing it by two.

Clarification note on the RPA radius

The RPA radius is not the automatic minimum distance of the tree protection. It is a notional figure for use as a means of calculating the actual area of the RPA. BS5837 clarifies this under *Section 3.7 Root Protection Area (RPA) – layout design tool indicating the minimum area around a tree deemed to contain sufficient roots and rooting volume to maintain the trees viability, and where the protection of the roots and soil structure is treated as a priority.*

Appendix 3 – Example of Tree Protective Fencing



Figure 2 **Default specification for protective barrier**

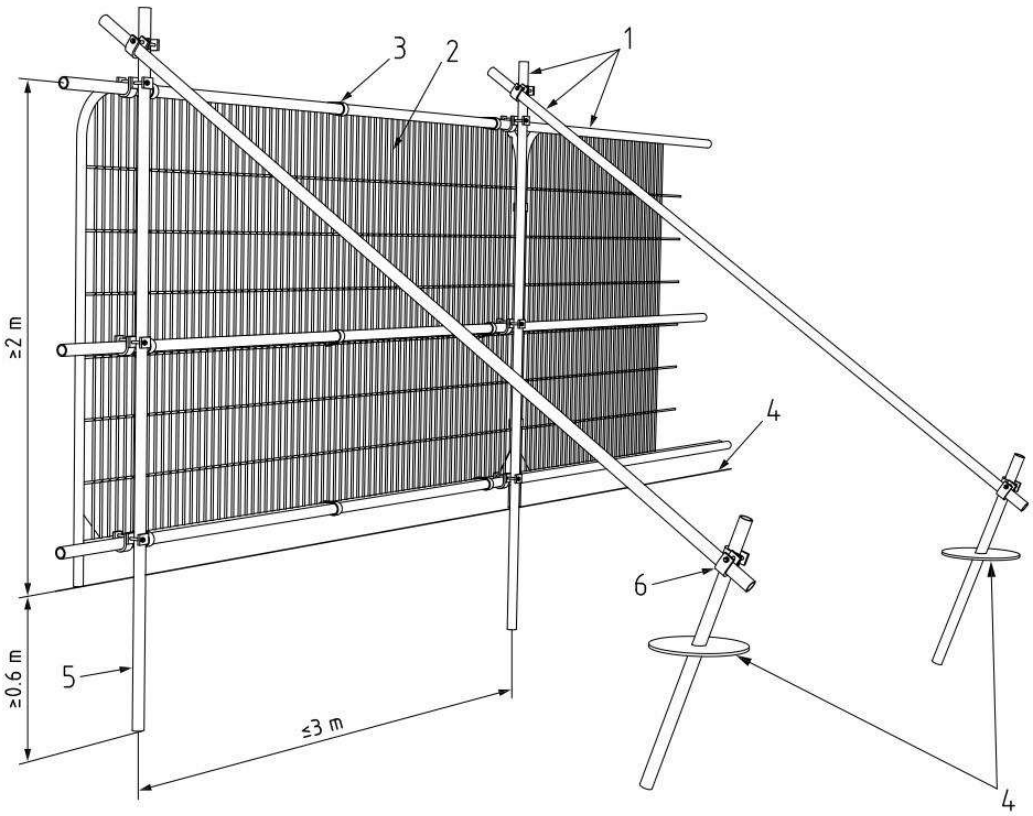

Key

1 Standard scaffold poles
2 Heavy gauge 2 m tall galvanized tube and welded mesh infill panels
3 Panels secured to uprights and cross-members with wire ties
4 Ground level
5 Uprights driven into the ground until secure (minimum depth 0.6 m)
6 Standard scaffold clamps

Appendix 4 – Example of Tree Protective Signs





Appendix 5 – Example of Temporary Ground Protection

DuraDeck

PRODUCT SPECIFICATIONS
DD1

Traction Surface: **Double-traction tread design includes two parallel traction treads positioned at 90 degrees to adjacent double traction tread sets.**

Module Size:
Length: 8' / 2.44 m
Width: 4' / 1.22 m
Module Size: 32 sq/ft / 2.973 sq/meters
Thickness: ½" thick mat + 3/8" cleat

Module Weight: 86 lbs. / 39.01 kg.
Per Square Foot: 2.69 lbs. / 43 oz. / 1.22 kg. / 1219 grams
Per Square Meter: 28.60 lbs. / 12.97 kg.

Colors: Black, White.
Custom colors available (minimum order required).

Material: Black High-Density Polyethylene (HDPE) post-industrial recycled plastic, naturally UV resistant due to the carbon black used for color. White mats available.

Test Results:

	ASTM	Units	Typical Values
Melt Index	D 1238	g/10min	4.9
Density	D 792	g/cm^3	.960
Tensile Strength @ Yield 50mm/min	D 638	mpa (psi)	30 (4,350)
Elongation @ Break 50mm/min	D 638	%	1 500
Flexural Modulus	D 790	mpa (psi)	1 240 (180,000)
Hardness, Shore D	D 2240	--	70
Compressive Strength:		D695-02a	psi 2,843
Flammability Resistance:	UL-94 HB		Passed

Tread Pattern: **DD1:** Rugged double-traction tread on both sides

Support Structure: Matting incorporates multi-directional structural support (cleat design) allowing for distribution or dispersion of PSI weight factors. Not intended for bridging.

Weight Loading: Varies, depending on sub-surface, up to 80 tons capacity.

Ground Surface: DuraDeck mats are designed to be used with no ground preparation over grass, gravel, soil, concrete, asphalt, mud and sandy soil conditions.

Connection System: DuraDeck mats have eight holes: one in each corner and four in the center line (two on each 8ft side) to create multi-directional roadways of nearly any size or shape. Mats can be connected using metal DuraLink connectors. DuraLinks do not require tools to install.

Shipping: Pallet maximum is 50 units (4' x 8')
20' Ocean Container: 250 – 4' x 8' unit order and/or equal to 29,240 lbs.
40' Ocean Container: 500 – 4' x 8' unit order and/or equal to 43,000 lbs.

Warranty: 7 years against cracking and breaking under normal use.



Signature Systems Group, LLC
New York, NY 10017

Tree Schedule

Client	DBFL Consulting Engineers Ltd
Project / Site	Dundrum Living Streets
Reference	26-1030-01
Survey Date	Thursday 17th September 2026

Abreviation	Definition	Age Class		Physiological Condition		Structural Condition		Category		U.L.E	Sub category	
H	Height (m)	Y (Young)	Newly planted (<10 yrs old)	Good	No obvious health problems	Good	No visible defects	A	High value and conservation	40+	1	Mainly arboricultural
Stem Dia.	Stem diameter (mm)	SM (Semi-mature)	First third of life expectancy	Fair	Intervention may improve health	Fair	Defects may require intervention	B	Moderate value and conservation	20+	2	Mainly landscape
C.C	Crown clearance (m)	EM (Early mature)	Second third of life expectancy	Poor	Serious ill health or dying	Poor	Dangerous or no remedy	C	Low value and conservation	10+	3	Mainly cultural
L.B.H	Lowest (significant) branch height (m)	M (Mature)	Full age for species					U	Not suitable for retention	<10		
L.B.D	Direction of lowest (significant) branch	OM (Over mature)	Beyond life expectancy & in decline									
U.L.E	Minimum useful life expectancy (yrs)	V (Veteran)	Ancient characteristics or conservation value		Prefix	*G - Group H - Hedgerow W - Woodland # after DBH - measurements estimated (tree inaccessible)*						

Tree No.	Tag No.	Species	Botanical Name	H (m)	Stem Dia.	No of Stems	Crown Spread (m)				C.C (m)	L.B.H (m)	L.B.D	Age	Physiological	Structural	Comments	Recommendations	U.L.E	Cat.	RPA (m2)	RPA Radial distance (m)
							N	E	S	W												
1	0760	Ash (Common)	*Fraxinus excelsior*	13	330	1	5	6	5	5	3	3	East	EM	Fair	Fair	Single stem forming spreading crown, conflict with street lamp, overhead cables and building, underground services, from concrete footpath.	Fell to facilitate proposed works.	20+	B1	48	4
2	0761	Ash (Common)	*Fraxinus excelsior*	10	250	1	2	4	4	5	3	3	East	SM	Fair	Fair	Single stem forming spreading crown, conflict with overhead cables and building, underground services, from concrete footpath.	Fell to facilitate proposed works.	20+	B1	28	3
3	0762	Ash (Common)	*Fraxinus excelsior*	14	370	1	6	5	6	6	4	4	North	EM	Fair	Fair	Two leaders from 3m forming spreading crown, conflict with overhead cables and building, underground services, from concrete footpath.	Fell to facilitate proposed works.	20+	B1	64	5
4	0763	Mixed Species Group	*N/a*	2	250	1	1	1	1	1	0	n/a	n/a	SM	Fair	Fair	Mixed species vegetation comprising New Zealand privet, cotoneaster, holly, rowan and elder, from verge around car park and shopping centre alongside footpath.	None.	10+	C1	28	3
5	0764	Elder	*Sambucus nigra*	3	290	1	3	3	3	3	1	0	East	SM	Fair	Fair	Multistem from base forming compact crown, from shrub bed alongside footpath.	None.	10+	C2	41	4
6	0765	Mixed Species Group	*N/a*	2	250	1	1	1	1	1	0	n/a	n/a	SM	Fair	Fair	Mixed species vegetation comprising cotoneaster, sycamore, wild cherry, buddlea and New Zealand privet, from verge alonsgide footpath.	Remove area within footpath to facilitate proposed works.	10+	C2	28	3

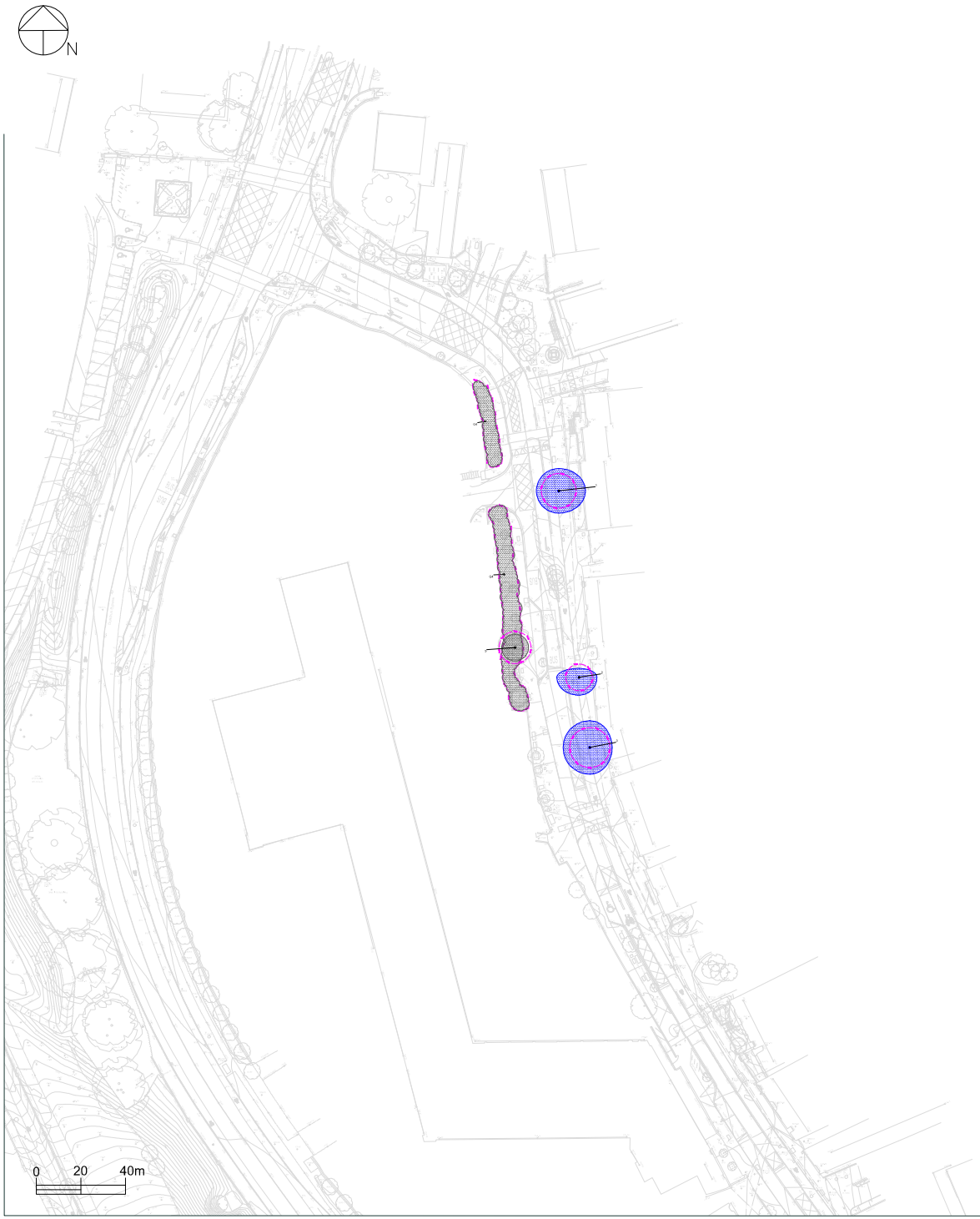

LEGEND

- Category A (Tree stem and canopy spread)
- Category B
- Category C
- Category U
- Root Protection Area
- Existing Layout

NOTES

Purpose of Tree Survey
The tree survey has been carried out in accordance with BS5837:2012 'Trees in relation to design, demolition and Construction - Recommendations'.

The purpose is to illustrate the constraints and opportunities posed by trees and hedgerows, both in the design layout proposed and that is considered to be of suitable quality and value to be retained within a layout by virtue of the site.

Details
Tree and hedgerow positions place reliance on topographical survey. The position of trees and hedgerows not recorded on the topographical survey remains indicative.

Scale is for planning purposes only.

Plan should be read in conjunction with accompanying Tree Schedule.

BS5837 Retention Categories
The purpose of the tree categorisation method is to provide a framework for the assessment of the quality of the existing tree stock, allowing informed decisions to be made concerning which trees should be removed or retained in the event of development occurring.

Category A
Trees of high arboricultural quality and value in such a condition as to make a significant contribution for a minimum of 40 years.

Category B
Trees of moderate arboricultural quality and value in such a condition as to make a substantial contribution for a minimum of 20 years.

Category C
Trees of low arboricultural quality and value currently in adequate condition and able to remain until new planting is established with a minimum useful life expectancy of 10 years, or trees with a stem diameter of <150mm.

Category U
Trees in poor physiological or structural condition that cannot realistically be retained in the context of current land use for longer than 10 years.

Date	Details of Change	By	Version
22.09.26	Original tree/hedgerow survey	RC	v1

TITLE: Tree Constraints Plan

PROJECT TITLE: Dundrum Living Streets (1 of 3)

CLIENT: DBFL Consulting Engineers Ltd

CONSULTANT: 26-1030-02

REVISION: v1

DATE: 22.09.2026

SCALE: 1:1000@A1

DRAWN BY: RC

CHECKED BY: JM

This drawing and its contents are the property of John Morris Arboricultural Consultancy Ltd and must not be copied, used or disclosed in any way without the written consent of

John Morris Arboricultural Consultancy Ltd
Executive Suites, Phoenix Court, Lichfield Road, Walsall, WS7 9TW
Email: info@johnmorrisarboricultural.co.uk | Mobile: +44 (0) 7939 155 481
Web: www.johnmorrisarboricultural.com

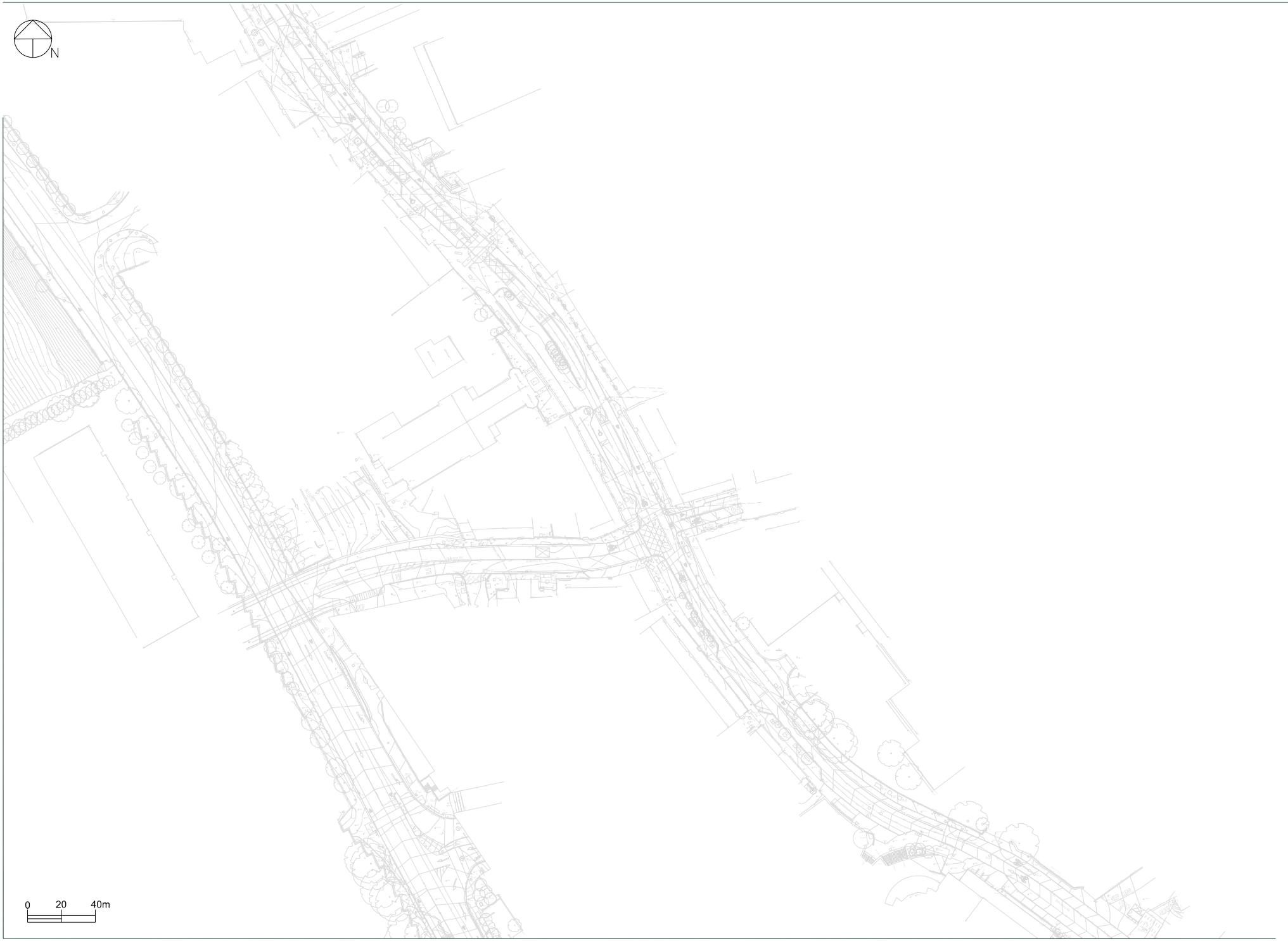

LEGEND

- Category A (Tree stem and canopy spread)
- Category B
- Category C
- Category U
- Root Protection Area
- Existing Layout

NOTES

Purpose of Tree Survey
The tree survey has been carried out in accordance with BS5837:2012 'Trees in relation to design, demolition and Construction - Recommendations'.

The purpose is to illustrate the constraints and opportunities posed by trees and hedgerows, both in the initial design stages and beyond that is compliance with the BS5837 'Trees in relation to design, demolition and construction' standard.

Survey
Tree and hedgerow positions place reliance on topographical survey. The position of trees and hedgerows not recorded on the topographical survey remains indicative.

Scale is for planning purposes only.

Plan should be read in conjunction with accompanying Tree Schedule.

BS5837 Retention Categories
The purpose of the tree categorisation method is to identify the quality and value of trees in relation to the context of the existing tree stock, allowing informed decisions to be made concerning which trees should be removed or retained in the event of development occurring.

Category A
Trees of high arboricultural quality and value in such a condition as to make a significant contribution for a minimum of 40 years.

Category B
Trees of moderate arboricultural quality and value in such a condition as to make a substantial contribution for a minimum of 20 years.

Category C
Trees of low arboricultural quality and value currently in adequate condition and able to remain until new planting is established with a minimum useful life expectancy of 10 years, or trees with a stem diameter of <150mm.

Category U
Trees in poor physiological or structural condition that cannot realistically be retained in the context of current land use for longer than 10 years.

Date	Details of Change	By	Version
22.09.26	Original tree/hedgerow survey	RC	v1

TITLE:	Tree Constraints Plan
PROJECT NAME:	Dundrum Living Streets (2 of 3)
CLIENT:	DBFL Consulting Engineers Ltd
CONSULT. ACT:	26-1030-02
REVISION:	v1
DATE: 22.09.2026	SCALE: 1:1000@A1
DRAWN BY: RC	CHECKED BY: JM

This drawing and its contents are the property of John Morris Arboricultural Consultancy Ltd and must not be copied, used or disclosed in any way without the written consent of...

John Morris Arboricultural Consultancy Ltd
Executive Suites, Phoenix Court, Lichfield Road, Stafford, ST17 4TW
Email: info@johnmorrisarboricultural.co.uk | Mobile: +44 (0) 7939 155 481
Web: www.johnmorrisarboricultural.co.uk



LEGEND

- Category A (Tree stem and canopy spread)
- Category B
- Category C
- Category U
- Root Protection Area
- Existing Layout

NOTES

Purpose of Tree Survey
The tree survey has been carried out in accordance with BS5837:2012 'Trees in relation to design, demolition and construction - Recommendations'.

The purpose is to illustrate the constraints and opportunities posed by trees and hedgerows, both in the initial master planning stage and the consideration of the viability, number and extent within a development.

Details
Tree and hedgerow positions plus rollover on topographical survey. The position of trees and hedgerows not recorded on the topographical survey remains indicative.

Scale is for planning purposes only.

Plan should be read in conjunction with accompanying Tree Schedule.

BS5837 Retention Categories
The purpose of the tree categorisation method is to identify the quality and value of trees in relation to the context of the existing tree stock, allowing informed decisions to be made concerning which trees should be removed or retained in the event of development occurring.

Category A
Trees of high arboricultural quality and value in such a condition as to make a significant contribution for a minimum of 40 years.

Category B
Trees of moderate arboricultural quality and value in such a condition as to make a substantial contribution for a minimum of 20 years.

Category C
Trees of low arboricultural quality and value currently in adequate condition and able to remain until new planting is established with a minimum useful life expectancy of 10 years, or trees with a stem diameter of <150mm.

Category U
Trees in poor physiological or structural condition that cannot realistically be retained in the context of current land use for longer than 10 years.

Date	Details of Change	By	Version
22/09/26	Original tree/hedgerow survey	RC	v1

TITLE: Tree Constraints Plan

PROJECT NAME: Dundrum Living Streets (3 of 3)

CLIENT: DBFL Consulting Engineers Ltd

JMA PROJECT NO: 26-1030-02

REVISION: v1

DATE: 22.09.2026

SCALE: 1:1000@A1

DRAWN BY: RC

CHECKED BY: JM

This drawing and its contents are the property of John Morris Arboricultural Consultancy Ltd and must not be copied, used or disclosed in any way without the written consent of...

John Morris Arboricultural Consultancy Ltd
Executive Suites, Phoenix Court, Lichfield Road, Stafford, ST17 4TW
Email: info@johnmorrisarboricultural.co.uk | Mobile: +44 (0) 7939 155 487
Web: www.johnmorrisarboricultural.co.uk

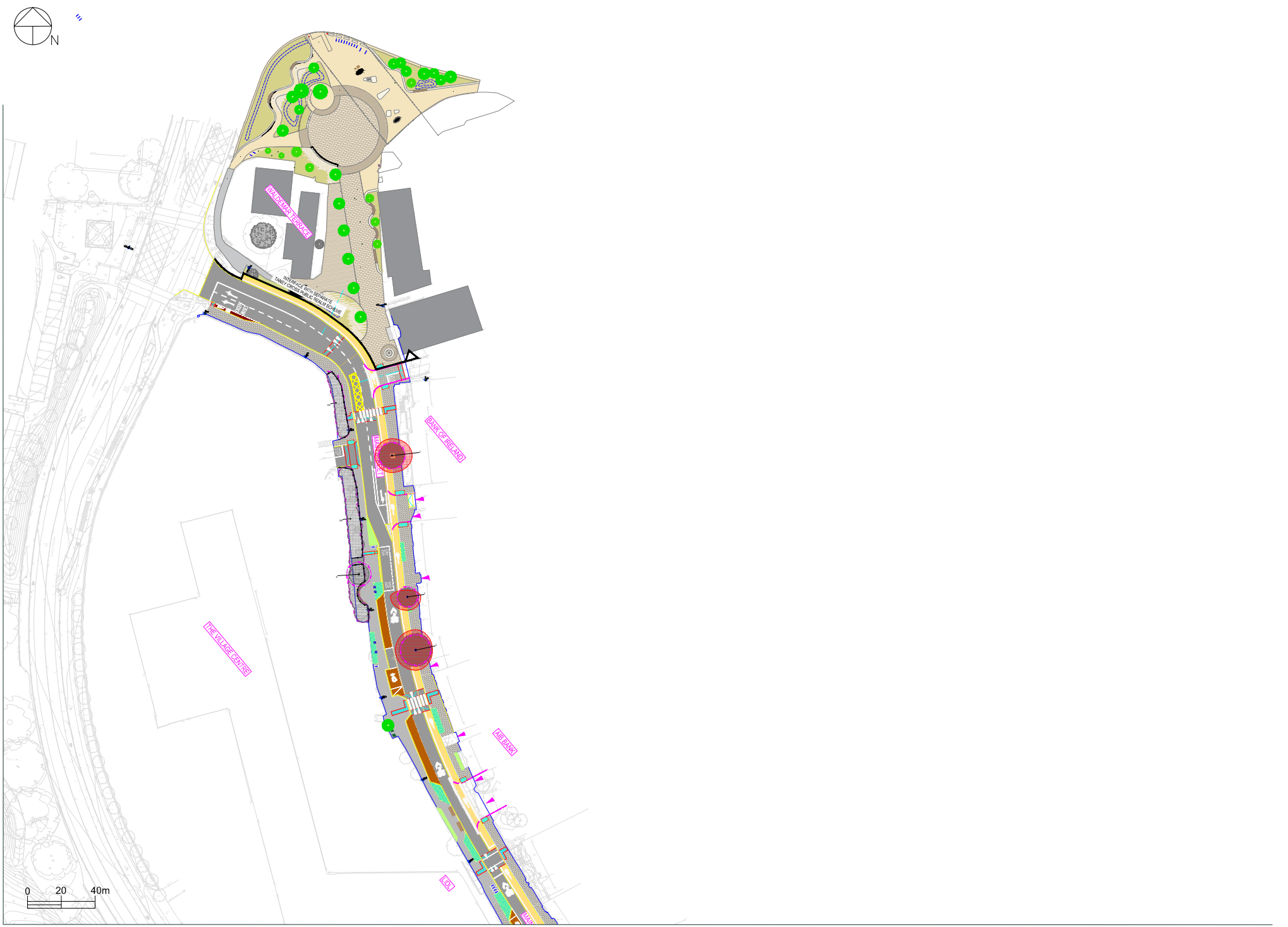

LEGEND

- Category A (Tree stem and canopy spread)
- Category B
- Category C
- Category U
- Root Protection Area
- Trees to be removed
- Existing Layout
- Proposed Layout
- Tree protection fencing in accordance with BS5837:2012 to protect retained tree roots, stems and canopies (final location to be agreed on site pre-construction)

NOTES

Purpose of tree Survey

This tree survey has been carried out in accordance with BS5837:2012 *Trees in relation to design, demolition and Construction – Recommendations*.

The purpose is to illustrate the constraints and opportunities posed by trees and hedgerows, to help the design team prepare a layout that is considerate of the existing canopy cover and safeguards existing features of the site.

Caveats

Tree and hedgerow provisions upon request on 26/10/2026 and may not reflect the full extent of hedgerows not recorded on the topographical survey remains indicative.

Scale is for planning purposes only.

The survey is to be read in colour and in conjunction with accompanying Tree Schedule.

BS5837 Retention Categories

The purpose of the tree categorisation method is to identify the quality and value in a procedural survey of the existing tree stock allowing informed decisions to be made as to which trees are desirable to be retained as a material in the event of development occurring.

Category A

Trees of high arboricultural quality and value in such condition to make a significant contribution for a minimum of 40 years.

Category B

Trees of moderate arboricultural quality and value in such condition to make a appreciable contribution for a minimum of 20 years.

Category C

Trees of low arboricultural quality and value currently in adequate condition to remain until new planting is established with a minimum useful life expectancy of 10 years, or trees with a stem diameter of <150mm.

Category U

Trees in poor physiological or structural condition that cannot realistically be retained in the context of current land use for longer than 10 years.

Date	Details of Change	By	Version
22.10.26	Issued originated layout	RC	v1

TITLE:
Tree Impact & Protection Plan

PROJECT NAME:
Dundrum Living Streets (1 of 3)

CLIENT:
DBFL Consulting Engineers Ltd

CONSULTANT:
26-1030-03

REVISION:
v1

DATE:
22.10.2026

SCALE:
1:1000@A1

DRAWN BY:
RC

CHECKED BY:
JM

This drawing and its contents are the property of John Morris Arboricultural Consultancy Ltd and may not be copied, used or disclosed in any way without the consent of the company.

John Morris Arboricultural Consultancy Ltd
Executive Suites, Phoenix Court, Lombard Street, Belfast, BT1 2DW
Email: info@johnmorrisarboricultural.co.uk | Mobile: +44 (0) 7930 555 487
Web: www.johnmorrisarboricultural.com

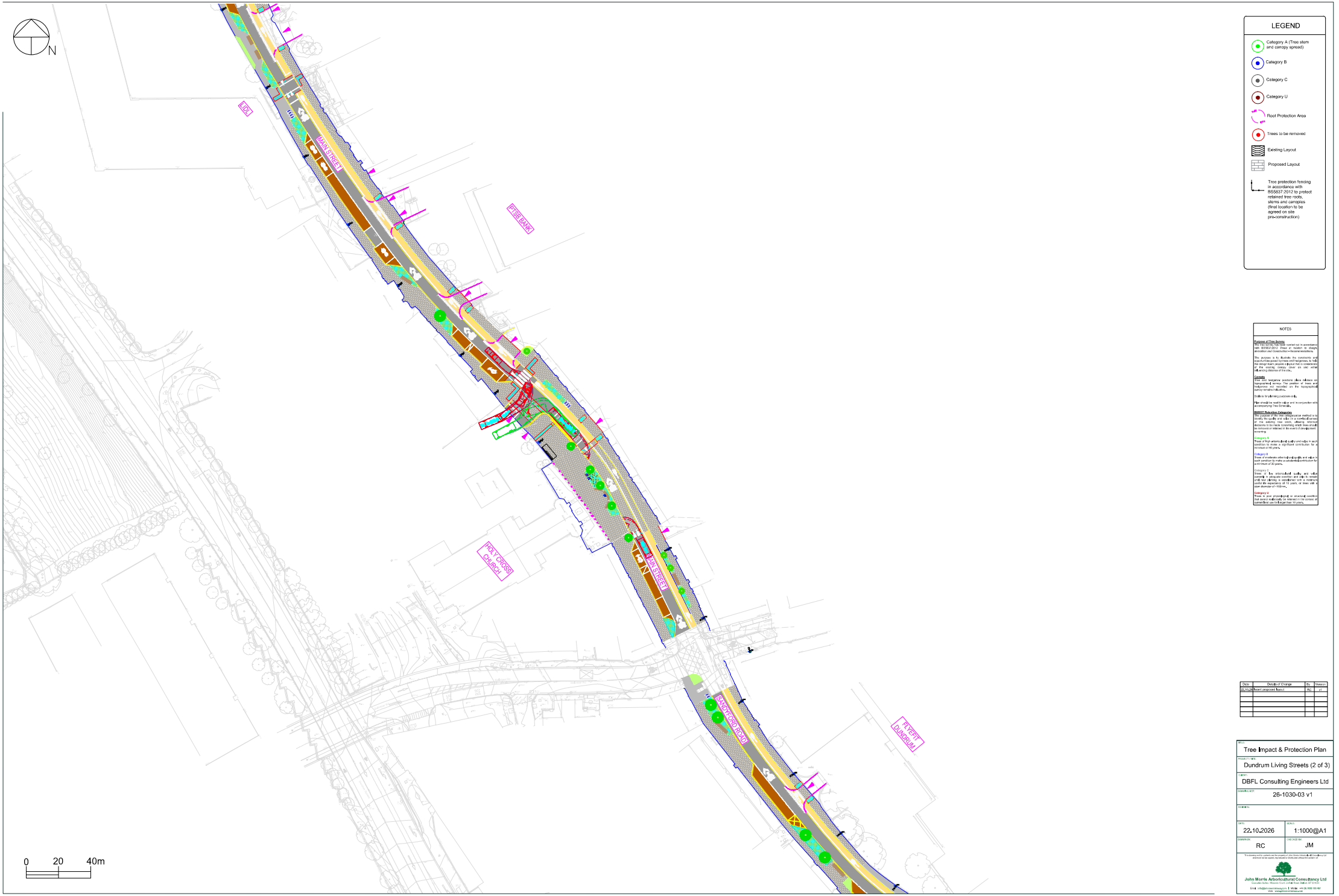
N
LEGEND
Category A (Tree stem and canopy spread)
Category B
Category C
Category U
Root Protection Area
Trees to be removed
Existing Layout
Proposed Layout
Tree protection fencing in accordance with BS5837:2012 to protect retained tree roots, stems and canopies (final location to be agreed on site pre-construction)
NOTES
LDN
MAIN STREET
PESS BANK
HOLY CROSS CHURCH
SANDYFORD ROAD
RIVER EAST DUNDRUM
0
20
40m
Date
Details of Change
By
Version
22.10.26
Issued originated layout
RC
v1
Tree Impact & Protection Plan
Dundrum Living Streets (2 of 3)
DBFL Consulting Engineers Ltd
26-1030-03 v1
22.10.2026
1:1000@A1
RC
JM
John Morris Arboricultural Consultancy Ltd



Date	Details of Change	By	Version
22.10.26	Issued originated Issue	RC	v1

Tree Impact & Protection Plan

Dundrum Living Streets (3 of 3)

DBFL Consulting Engineers Ltd

26-1030-03

v1

22.10.2026

1:1000@A1

RC

JM

John Morris Arboricultural Consultancy Ltd