COLOUR DRAWING ☒

Date Drawn:	AUGUST 2019
Drawn By:	DP
Date Issued:	
Issued By:	

bmtrada SYSTEM CERTIFICATION ISO 9001 CERTIFICATION

BUILDING INFORMATION MODELLING (BIM) IS 19/ISO 19650-2:2018 NSAI Certified

Rev	Amendment	By	Date
PL0	ISSUED FOR PLANNING	IBS	2020/03/16
PL1	ISSUED FOR PLANNING	IBS	2021/01/18
PL2	ISSUED FOR PLANNING	DAP	2021/03/25

Client:

HYDE PARK COMMUNITY SPORTS CENTRE TRUST

Job: HYDE PARK COMMUNITY SPORTS CENTRE

Title: PROPOSED FINISHES, SIGNAGE AND LINEMARKINGS LAYOUT

PUNCH consulting engineers
Dublin|Limerick|Cork|Galway|Glasgow
Carnegie House, Library Road, Dun Laoghaire, Co. Dublin, A96 C7W7
IRL: +353 1 271 2200 www.punchconsulting.com

Stage: PLANNING
Scale @ A1: 1:200
Technician Check: JB
Engineer Check: MCD
Approved: PC
Drawing No: 192104-002
Rev: PL2

LEGEND:

- PROPOSED FOUL WATER SEWER
- PROPOSED FOUL WATER MANHOLE — FMH 1.1
- PROPOSED FOUL WATER ACCESS JUNCTION — FAJ 1.1
- PROPOSED FOUL WATER INSPECTION CHAMBER — FIC 1.1
- PROPOSED GULLY — G
- PROPOSED SURFACE WATER SEWER
- PROPOSED SURFACE WATER MANHOLE — SMH 1.1
- EXISTING SURFACE WATER MANHOLE
- EXISTING SURFACE WATER SEWER
- PROPOSED SURFACE WATER ACCESS JUNCTION — SAJ 1.1
- PROPOSED SURFACE WATER INSPECTION CHAMBER — SIC 1.1
- PROPOSED ACO CHANNEL DRAIN — ACO
- EXISTING ATTENUATION TANKS
- PROPOSED GREEN ROOF
- PROPOSED PERMEABLE PAVING
- PROPOSED BUILDING
- EXISTING BUILDINGS
- EXISTING COMBINED SEWER TO BE ABANDONED — FS-AB-EX
- EXISTING FOUL SEWER TO BE ABANDONED — EX-FW
- RED LINE BOUNDARY

PROPOSED SURFACE WATER NETWORK

Name	US Node	DS Node	Length (m)	US IL (m)	DS IL (m)	Fall (m)	Slope (1:X)	Dia (mm)
S1.000	S1-0	S1-1	19.662	16.575	15.997	0.578	34	225
S1.001	S1-1	S1-2	20.35	15.997	15.877	0.12	170	225
S1.002	S1-2	S1-3	34.507	15.877	15.674	0.203	170	225
S2.000	S2-0	S2-1	8.492	16.655	16.605	0.05	170	225
S2.001	S2-1	S2-2	36.167	16.605	16.392	0.213	170	225
S2.002	S2-2	S1-3	13.427	16.392	16.313	0.079	170	225
S1.003	S1-3	EXSMH	9.706	15.674	15.617	0.057	170	225

PROPOSED SURFACE WATER MANHOLE SCHEDULE

Name	Cover Level (m)	Depth (m)
S1-0	18	1.425
S1-1	18	2.003
S1-2	17.8	1.923
S2-0	18.08	1.425
S2-1	18.08	1.475
S2-2	18	1.608
S1-3	18	2.326
EXSMH	17.809	2.192

PROPOSED FOUL WATER NETWORK

Name	US Node	DS Node	Length (m)	US IL (m)	DS IL (m)	Fall (m)	Slope (1:X)	Dia (mm)
F1.000	FAJ 1.0	FAJ 1.1	2.292	17.02	16.982	0.038	60	150
F1.001	FAJ 1.1	FAJ 1.2	7.669	16.982	16.925	0.057	135	150
F1.002	FAJ 1.2	FAJ 1.3	4.909	16.925	16.889	0.036	135	150
F1.003	FAJ 1.3	FAJ 1.4	8.501	16.889	16.826	0.063	135	150
F1.004	FAJ 1.4	FIC 1.5	4.512	16.826	16.793	0.033	135	150
F1.005	FIC 1.5	FIC 1.6	40.965	16.793	16.49	0.303	135	150
F1.006	FIC 1.6	FIC 1.7	1.131	16.49	16.482	0.008	135	150
F1.007	FIC 1.7	FMH 1.8	8.253	16.482	16.421	0.061	135	150
F1.008	FMH 1.8	EXCMH	13.606	16.421	16.32	0.101	135	150

PROPOSED FOUL WATER MANHOLE SCHEDULE

Name	Cover Level (m)	Depth (m)
FAJ 1.0	18.07	1.05
FAJ 1.1	18.07	1.088
FAJ 1.2	18.06	1.135
FAJ 1.3	18.05	1.161
FAJ 1.4	18.03	1.204
FIC 1.5	18.03	1.237
FIC 1.6	17.85	1.36
FIC 1.7	17.85	1.368
EXCMH	17.8	1.48
FMH 1.8	17.983	1.562

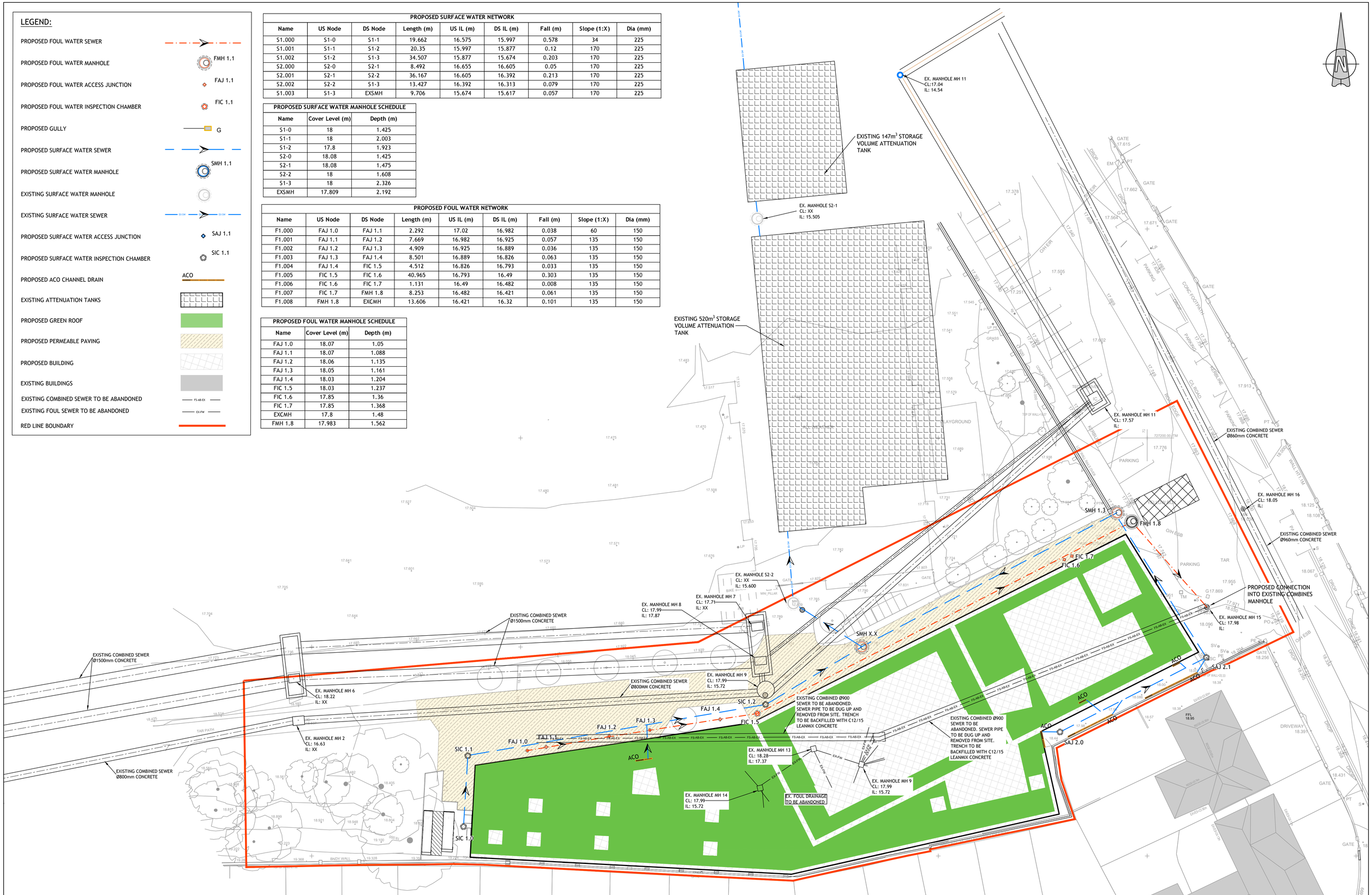

COLOUR DRAWING ☒

Date Drawn:	AUGUST 2019
Drawn By:	DP
Date Issued:	
Issued By:	

bmtrada SYSTEM CERTIFICATION ISO 9001 CERTIFICATION · bmtrada SYSTEM CERTIFICATION ISO 14001 CERTIFICATION · bmtrada SYSTEM CERTIFICATION ISO 45001 CERTIFICATION · BUILDING INFORMATION MODELLING (BIM) I.S. EN ISO 19650-2:2018 NSAI Certified

Rev	Amendment	By	Date
PL0	ISSUED FOR PLANNING	IBS	2020/03/16
PL1	ISSUED FOR PLANNING	DP	2021/01/18
PL2	ISSUED FOR PLANNING	DAP	2021/03/25

Client:

HYDE PARK COMMUNITY SPORTS CENTRE TRUST

Job: HYDE PARK COMMUNITY SPORTS CENTRE

Title: PROPOSED DRAINAGE LAYOUT

PUNCH consulting engineers
Dublin|Limerick|Cork|Galway|Glasgow
Carnegie House, Library Road, Dun Laoghaire, Co. Dublin, A96 C7W7
IRL: +353 1 271 2200 www.punchconsulting.com

Stage:	PLANNING
Scale @ A1:	1:200
Technician Check:	JB
Engineer Check:	MCD
Approved:	PC
Drawing No:	192104-003
Rev:	PL2

WATERMAIN LEGEND:

PROPOSED WATER METER IN ACCORDANCE WITH IRISH WATER STANDARDS	M
PROPOSED SLUICE VALVE	SV
PROPOSED 50mm OD PE 100 SDR 11 WATERMAIN IN ACCORDANCE WITH IRISH WATER STANDARDS	WM
EXISTING WATERMAIN (FROM RECORDS)	EX WM
PROPOSED SITE BOUNDARY	

NOTES:

1. TOPOGRAPHICAL SURVEY BY LASER SURVEYS - DRAWING 1908_955_01_2D (18/08/2019).
2. EXISTING DRAINAGE INFORMATION SUPPLIED BY IRISH WATER.
3. ALL WATER MAIN DETAILS TO BE CONSTRUCTED IN ACCORDANCE WITH IRISH WATER CODE OF PRACTICE FOR WATER INFRASTRUCTURE & IRISH WATER STANDARD DETAILS.
4. ALL INTERNAL BASEMENT WATER MAINS TO M&E ENGINEERS SPECIFICATION.
5. FOR THE APPLICABLE STANDARD IRISH WATER STANDARD DETAILS PLEASE REFER TO 192104-011.

COLOUR: DRAWING

Date Drawn:	AUGUST 2019
Drawn By:	DP
Date Issued:	
Issued By:	

BUILDING INFORMATION MODELLING (BIM) IS EN ISO 19650-2:2018 NSAI Certified

Rev	Amendment	By	Date
PL0	ISSUED FOR PLANNING	IBS	2020/03/16
PL1	ISSUED FOR PLANNING	DP	2021/01/18
PL2	ISSUED FOR PLANNING	DAP	2021/03/25

Client:

HYDE PARK COMMUNITY SPORTS CENTRE TRUST

Job: HYDE PARK COMMUNITY SPORTS CENTRE

Title: PROPOSED WATERMAIN LAYOUT

PUNCH consulting engineers
Dublin|Limerick|Cork|Galway|Glasgow
Carnegie House, Library Road, Dun Laoghaire, Co. Dublin, A96 C7W7
IRL: +353 1 271 2200 www.punchconsulting.com

Stage:	PLANNING
Scale @ A1:	1:200
Technician Check:	JB
Engineer Check:	MCD
Approved:	PC
Drawing No:	192104-004
Rev:	PL2

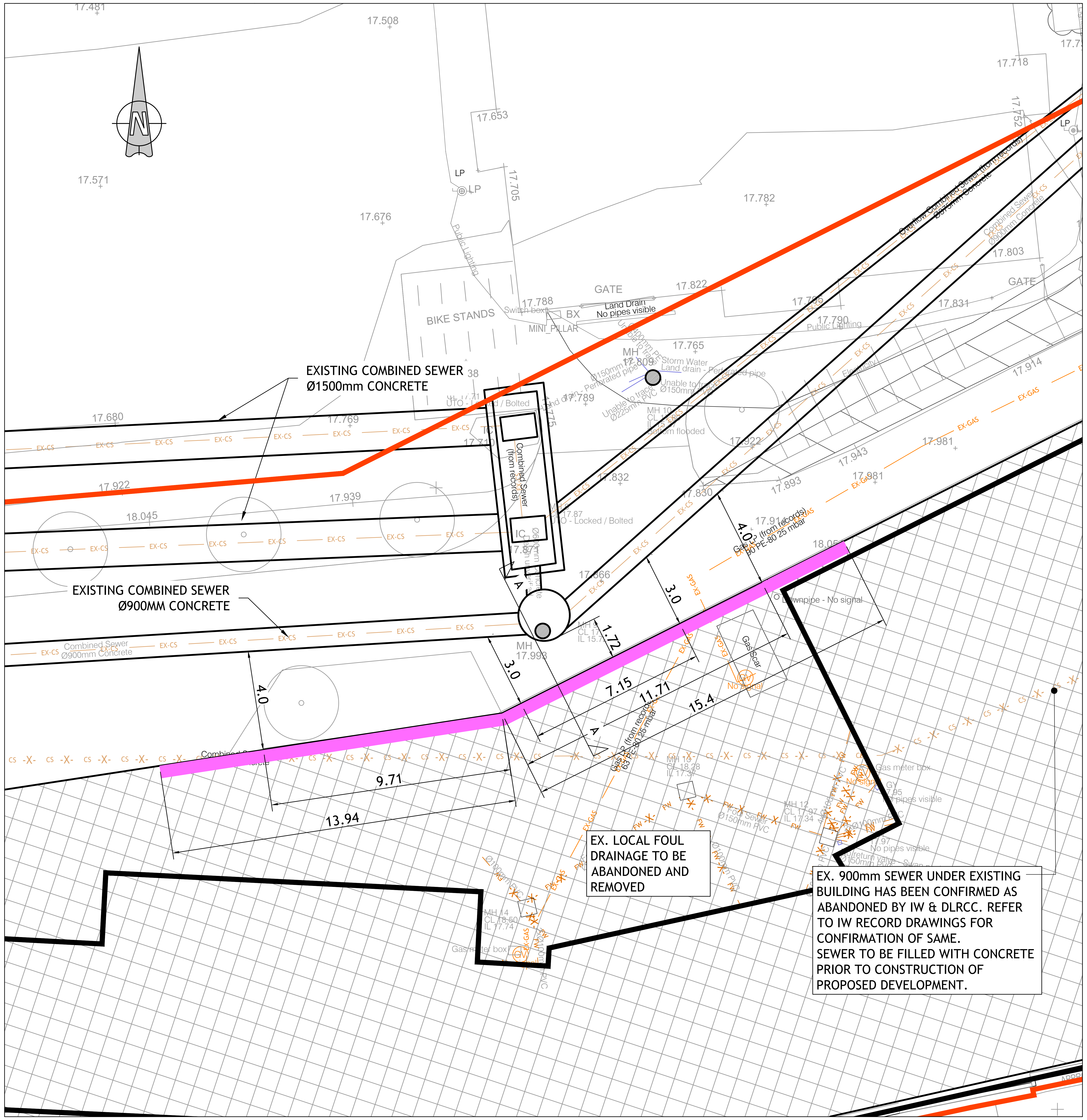

EX. LOCAL FOUL DRAINAGE TO BE ABANDONED AND REMOVED

EX. 900mm SEWER UNDER EXISTING BUILDING HAS BEEN CONFIRMED AS ABANDONED BY IW & DLRCC. REFER TO IW RECORD DRAWINGS FOR CONFIRMATION OF SAME.
SEWER TO BE FILLED WITH CONCRETE PRIOR TO CONSTRUCTION OF PROPOSED DEVELOPMENT.

PLAN

SCALE 1:100

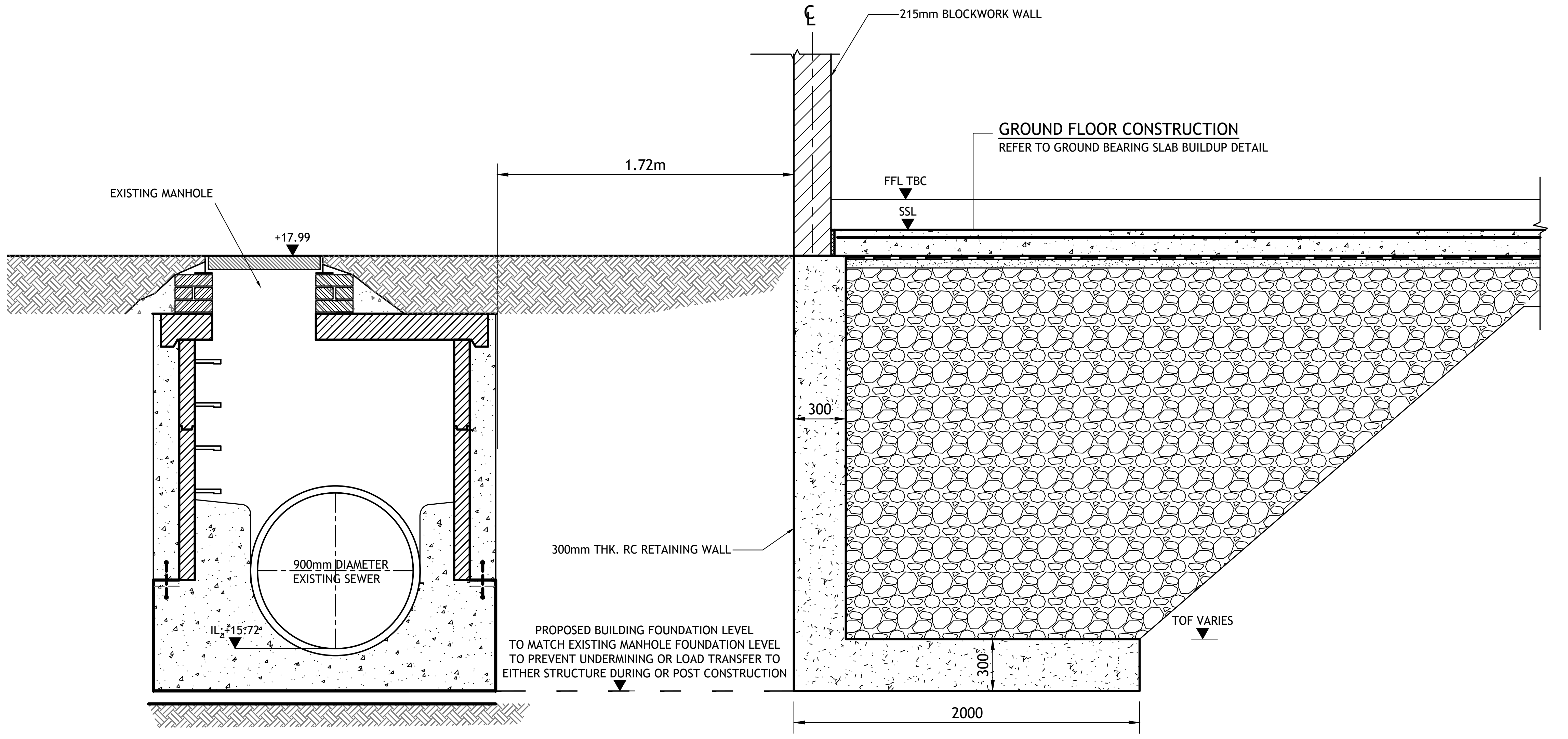

PROPOSED BUILDING FOUNDATION LEVEL TO MATCH EXISTING MANHOLE FOUNDATION LEVEL TO PREVENT UNDERMINING OR LOAD TRANSFER TO EITHER STRUCTURE DURING OR POST CONSTRUCTION

SECTION A-A - PROPOSED ECCENTRIC FOUNDATION DETAIL ADJACENT TO EXISTING IRISH WATER MANHOLE AND SEWER

SCALE 1:25

LEGEND:

PROPOSED BUILDING EXTENTS	▨
EXTENT OF ECCENTRIC FOUNDATION	🟪
EXISTING BUILDING OUTLINE	▬
EXISTING FOUL TO BE ABANDONED	-X- FW -X- FW —
EXISTING COMBINED SEWER TO BE ABANDONED	-X- CS -X- CS —
EXISTING GAS	—— EX-GAS ——
EXISTING COMBINED SEWER	—— EX-CS ——

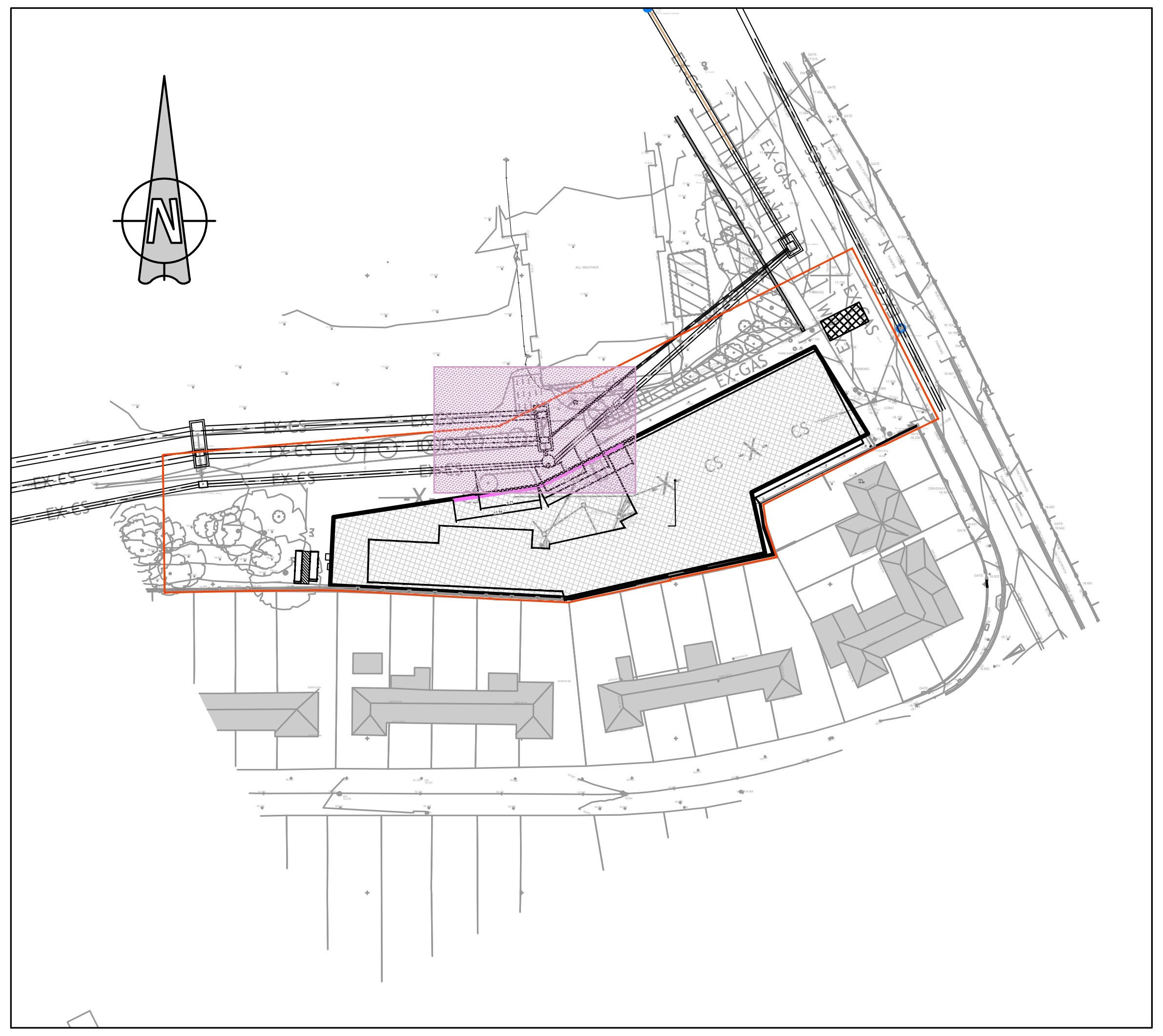

KEY PLAN

NOT TO SCALE

COLOUR DRAWING ☒

Date Drawn: SEPT 2019
Drawn By: DP
Date Issued:
Issued By:

BUILDING INFORMATION MODELLING (BIM)
I.S. EN ISO 19650-2:2018
NSAI Certified

Rev	Amendment	By	Date
PL0	ISSUED FOR PLANNING	IBS	2020/03/16
PL1	ISSUED FOR PLANNING	DP	2021/01/18
PL2	ISSUED FOR PLANNING	DAP	2021/03/24
PL3	ISSUED FOR PLANNING	DAP	2021/03/25

Client:
HYDE PARK COMMUNITY SPORTS CENTRE TRUST

Job: HYDE PARK COMMUNITY SPORTS CENTRE
Title: FOUNDATION ADJACENT TO IRISH WATER SEWER DETAIL

PUNCH consulting engineers
Dublin|Limerick|Cork|Galway|Glasgow
Carnegie House, Library Road, Dun Laoghaire, Co. Dublin, A96 C7W7
IRL: +353 1 271 2200 www.punchconsulting.com

Stage: PLANNING
Scale @ A1: AS SHOWN
Technician Check: JB
Engineer Check: MCD
Approved: TM
Drawing No: 192104-005
Rev: PL3

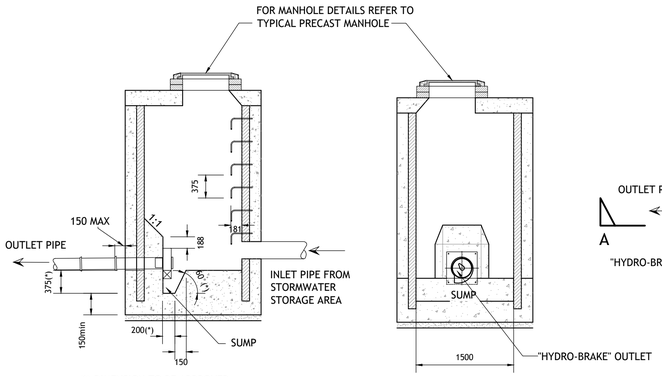

(*) DIMENSION TO BE APPROVED BY "HYDRO-BRAKE" SUPPLIERS

SECTION A-A

SECTION B-B

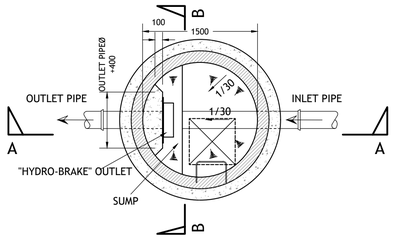

PLAN

TYPICAL "HYDROBRAKE" MANHOLE DETAIL

SCALE 1:50

NOTES:

1. FOR ALL DRAINAGE NOTES REFER TO PUNCH DRAWING 192104-001

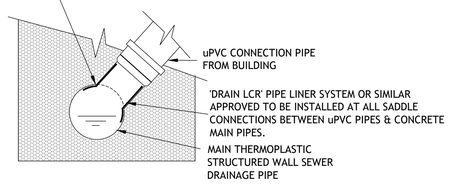

SEALED WATERTIGHT uPVC TO THERMOPLASTIC SADDLE CONNECTION

OR NOT TO SCALE

'DRAIN LCR' PIPE LINER - OPTION 1

'FLEXSEAL' FLEXIBLE SADDLE - OPTION 2

IN REAR GARDENS:
GLYNWED STANDARD 300x300mm CLEAR OPENING LIGHT DUTY SINGLE SEAL COVER & FRAME IN GREY IRON, BLACK COATED AND INCORPORATING COUNTERSUNK LOCKING SCREWS.

IN PAVED AREAS:
GLYNWED STANDARD 300x300mm CLEAR OPENING MEDIUM DUTY SINGLE SEAL COVER & FRAME IN GREY IRON, BLACK COATED AND INCORPORATING LOCKING BOLTS.

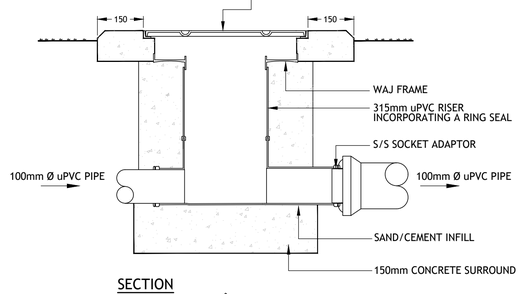

SECTION

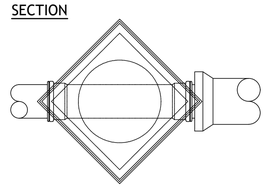

PLAN

ACCESS JUNCTION DETAIL

SCALE: 1:10

NOTE :

THE USE OF THIS DETAIL ASSUMES

1. THE GROUNDWATER TABLE IS BELOW THE BASE OF THE MANHOLE.

CONTRACTOR TO ADVISE ENGINEER WHERE THE WATER TABLE LEVEL IS HIGHER THAN THE BASE OF MANHOLE

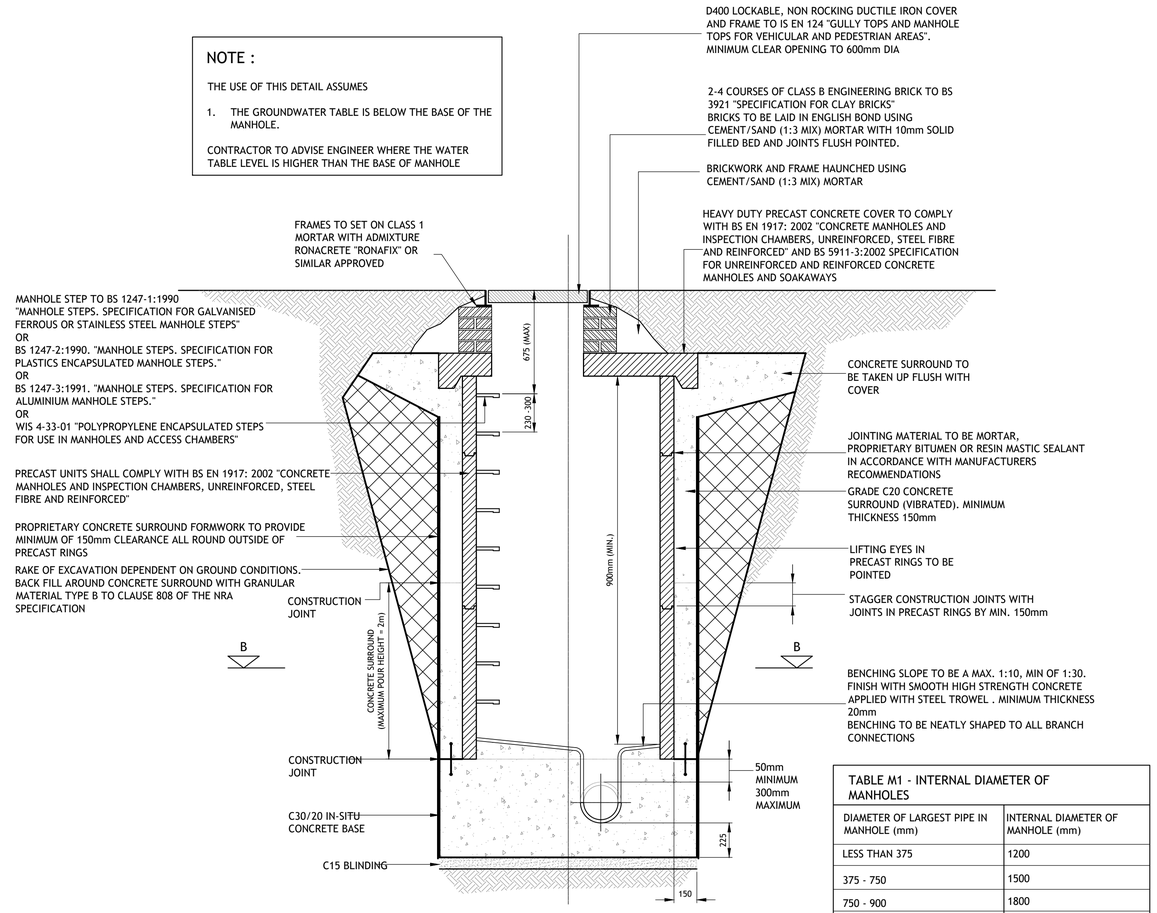

SECTION A-A

SCALE 1:20

TABLE M1 - INTERNAL DIAMETER OF MANHOLES	
DIAMETER OF LARGEST PIPE IN MANHOLE (mm)	INTERNAL DIAMETER OF MANHOLE (mm)
LESS THAN 375	1200
375 - 750	1500
750 - 900	1800
> 900	CONSULT LOCAL AUTHORITY

NOTE :
USE 1050 DIAMETER RINGS FOR PIPES LESS THAN 375mm DIAMETER WHERE DEPTH TO SOFFIT IS 1.35 - 1.5m

TABLE M2 - ROCKER PIPE LENGTH	
NOMINAL PIPE DIAMETER (mm)	EFFECTIVE LENGTH (M)
150 to 600	0.6
675 to 750	1.0
OVER 750	1.2

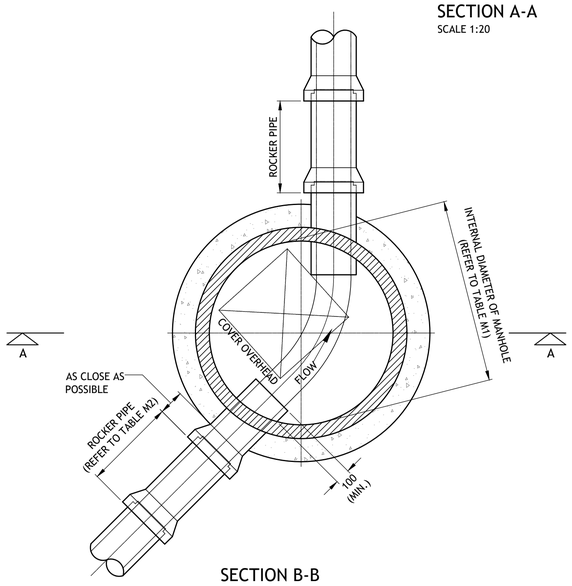

SECTION B-B

SCALE 1:20

- MANHOLE COVER TO BE HINGED AT RIGHT ANGLES TO KERBLINE SO THAT THEY CLOSE IN DIRECTION OF TRAFFIC.
- MANHOLE COVERS ON ROADS SHOULD BE LOCATED IN THE MIDDLE OF TRAFFICKED LANES INSIDE WHEEL TRACKS
- COVER AND FRAME TO BE INSTALLED SO THAT NO PART OF THE UNIT IS RAISED OR SUNKEN IN A WAY THAT COULD CAUSE A HAZARD TO PEDESTRIAN OR VEHICULAR TRAFFIC

NOTE :

1. MANHOLES WITH OUTGOING PIPES GREATER THAN 600mm DIA. SHOULD BE FITTED WITH GUARD BARS, SAFETY CHAINS OR OTHER SAFETY DEVICES.
2. FOR DEPTHS TO INVERT >2.700m AN ACCESS SHAFT OF MIN. 900mm DIAMETER AND REDUCING SLAB MAY BE USED.
3. WHERE THE DEPTH TO INVERT IS 1.00m OR LESS A 450mm x 450mm (OR 450mm DIA.) INSPECTION CHAMBER WITH MINIMUM COVER SIZES OF 450mm DIA. MAY BE USED SUBJECT TO ACCOMMODATION OF CONNECTIONS AND APPROVAL OF THE LOCAL AUTHORITY.
4. ON COMPLETION OF CONSTRUCTION INTERNAL SURFACES OF MANHOLE & SEWERS TO THOROUGHLY CLEANSED TO REMOVE ALL DELETERIOUS MATERIAL, WITHOUT SUCH MATTER BEING PASSED FORWARD INTO PUBLIC SEWERS OR WATERCOURSES
5. FIRST MANHOLE UPSTREAM FROM CONNECTION TO THE (EXISTING) PUBLIC SEWER TO BE FITTED WITH A SCREEN IN ORDER TO PREVENT DEBRIS ENTERING THE PUBLIC SEWER. THE SCREEN NOT TO BE REMOVED UNTIL IMMEDIATELY PRIOR TO OCCUPATION OF PREMISES TO BE SERVED BY SEWER.

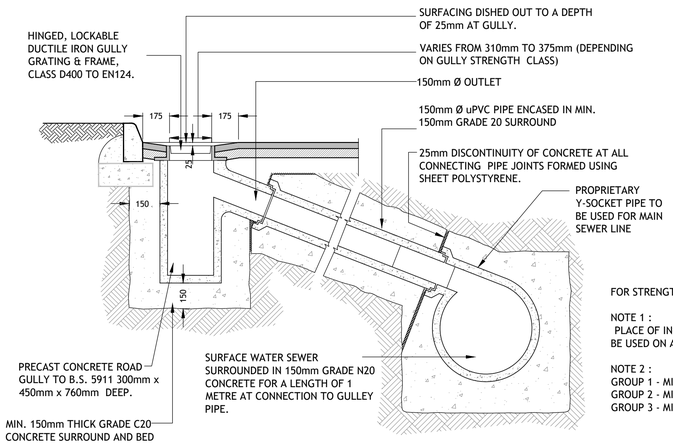

FOR STRENGTH CLASS OF GULLY REFER TO EN 124 : 1994, CLAUSE 5

NOTE 1 :
PLACE OF INSTALLATION & FIGURES 9A AND 9B PROPRIETARY FITTINGS TO BE USED ON ALL PIPEWORK CONNECTIONS

NOTE 2 :
GROUP 1 - MIN. CLASS A15 GROUP 4 - MIN. CLASS D400
GROUP 2 - MIN. CLASS B125 GROUP 5 - MIN. CLASS E600
GROUP 3 - MIN. CLASS C250 GROUP 6 - MIN. CLASS F900

PRECAST CONCRETE GULLY IN MACADAM AREA

SCALE 1:20

TYPICAL PRECAST MANHOLE DETAIL

SCALE 1:20

COLOUR DRAWING ☒

Date Drawn: SEPT 2019
Drawn By: DP
Date Issued:
Issued By:

Rev	Amendment	By	Date
PL0	ISSUED FOR PLANNING	IBS	2020/03/16
PL1	ISSUED FOR PLANNING	IBS	2021/01/18

Client:
HYDE PARK COMMUNITY SPORTS CENTRE TRUST

Job: HYDE PARK COMMUNITY SPORTS CENTRE
Title: STANDARD DETAILS SHEET 1

PUNCH consulting engineers
Dublin|Limerick|Cork|Galway|Glasgow
Carnegie House, Library Road, Dun Laoghaire, Co. Dublin, A96 C7W7
IRL: +353 1 271 2200 www.punchconsulting.com

Stage: PLANNING
Scale @ A1: AS SHOWN
Technician Check: JB
Engineer Check: MCD
Approved: PC
Drawing No: 192104-010
Rev: PL1

IRISH WATER WATERMAIN DETAILS

Details Required	Drawing No.	Drawing Title
Y	STD-W-01	Water service connection responsibility
N	STD-W-02	Typical layout for water mains within developments
Y	STD-W-03	Customer connection & boundary box
Y	STD-W-04	General pipe connections (sheet 1 of 7)
Y	STD-W-05	General pipe connections (sheet 2 of 7)
Y	STD-W-06	General pipe connections (sheet 3 of 7)
Y	STD-W-07	General pipe connections (sheet 4 of 7)
Y	STD-W-08	General pipe connections (sheet 5 of 7)
Y	STD-W-09	General pipe connections (sheet 6 of 7)
Y	STD-W-10	General pipe connections (sheet 7 of 7)
Y	STD-W-11	Typical service layout indicating separation distances
Y	STD-W-12	Restrictions on water infrastructure works adjacent to existing trees
Y	STD-W-12A	Restrictions on new trees / shrubs planting adjacent to watermains
Y	STD-W-13	Trench backfill & bedding
Y	STD-W-14	Sluice valve for ductile iron (D.I.) pipe (<350mm dia.) (sheet 1 of 2)
Y	STD-W-15	Sluice valve for polyethylene (P.E.) pipe (<350mm dia.) (sheet 2 of 2)
N	STD-W-16	On-line hydrant for ductile iron (D.I.) pipe (sheet 1 of 4)
N	STD-W-17	Off-line hydrant for ductile iron (D.I.) pipe (sheet 2 of 4)
N	STD-W-18	On-line hydrant for polyethylene (P.E.) pipe (sheet 3 of 4)
N	STD-W-19	Off-line hydrant for polyethylene (P.E.) pipe (sheet 4 of 4)
N	STD-W-20	On-line air valve for ductile iron (D.I.) pipe (sheet 1 of 4)
N	STD-W-21	Off-line air valve for ductile iron (D.I.) pipe (sheet 2 of 4)
N	STD-W-22	On-line air valve for polyethylene (P.E.) pipe (sheet 3 of 4)
N	STD-W-23	Off-line air valve for polyethylene (P.E.) pipe (sheet 4 of 4)
N	STD-W-24	Pressure reducing / sustaining valve (P.R.V. / P.S.V.) chamber
N	STD-W-25	Booster pump station arrangement
Y	STD-W-26	Non Mech. Meter chamber (40 - 250mm dia.)
Y	STD-W-26A	Mech. Meter chamber (40 - 250mm dia.)
Y	STD-W-27	Marker posts / plates
Y	STD-W-28	Water main thrust & support blocks
N	STD-W-29	Duct chamber
N	STD-W-30	Scour chamber & head wall arrangements
N	STD-W-30A	Washout hydrant
N	STD-W-31	Typical ditch / stream crossing for water main
N	STD-W-32	Typical bridge crossing for water main (sheet 1 of 2)
N	STD-W-33	Typical bridge crossing for water main (sheet 2 of 2)
N	STD-W-34	Security gate & fencing
N	STD-W-35	Pipe repair to existing mains
N	STD-W-36	Telemetry and wet kiosk
N	STD-W-37	Lamp bollard & lamp standard

IRISH WATER WASTER WATER STANDARD DETAILS

Details Required	Drawing No.	Drawing Title
Y	STD-WW-01	Waste water service connection responsibility
Y	STD-WW-02	Typical layout for sewer within new developments
Y	STD-WW-03	Drain & service connection pipework
Y	STD-WW-04	Typical sewer / service pipe connection
Y	STD-WW-05	Typical service layout indicating separation distances
Y	STD-WW-06	Restrictions on wastewater infrastructure adjacent to trees
Y	STD-WW-06A	Restrictions on new trees/shrubs planting adjacent to sewers
Y	STD-WW-07	Trench backfill & bedding
Y	STD-WW-08	Concrete bed, haunch & surround to wastewater pipes
Y	STD-WW-09	Blockwork manhole (<450mm dia.)
Y	STD-WW-10	Pre-cast concrete manhole
Y	STD-WW-11	In-situ concrete manhole
Y	STD-WW-12	Backdrop manholes
Y	STD-WW-13	Private side inspection chamber
N	STD-WW-14	Thrust blocks for rising mains
N	STD-WW-15	Scour valve chamber (foul rising main <200mm dia.)
N	STD-WW-16	Sluice valve details for rising mains ductile iron (D.I.) pipe (<200mm dia.) (sheet 1 of 2)
N	STD-WW-17	Sluice valve details for rising mains ductile iron (D.I.) pipe (<200mm dia.) (sheet 2 of 2)
N	STD-WW-18	Air valve chamber (foul rising main <200mm dia.)
N	STD-WW-19	Duct chamber
N	STD-WW-20	Emergency overflow structure
N	STD-WW-21	Typical ditch/stream crossing for gravity main (sheet 1 of 2)
N	STD-WW-22	Typical ditch/stream crossing for gravity main (sheet 2 of 2)
N	STD-WW-23	Typical bridge crossing for rising main (sheet 1 of 2)
N	STD-WW-24	Typical bridge crossing for rising main (sheet 2 of 2)
N	STD-WW-25	Security gate & fencing
N	STD-WW-26	Indicative pumping station layout
N	STD-WW-27	Flow meter chamber (foul rising main <200mm dia.)
N	STD-WW-28	Indicative submersible pumping station
N	STD-WW-28A	Indicative pre-cast concrete submersible pumping station
N	STD-WW-29	Rising main discharge manhole
N	STD-WW-30	Kiosk type 1 pumping station & wet kiosk (sheet 1 of 2)
N	STD-WW-31	Kiosk type 2 + 3 pumping station & wet kiosk (sheet 2 of 2)
N	STD-WW-32	Hardstanding area pumping station (permeable & impermeable)
N	STD-WW-33	Lamp bollard & lamp standard
Y	STD-WW-34	Vent stack

COLOUR DRAWING ☒

Date Drawn: SEPT 2019
Drawn By: DP
Date Issued:
Issued By:

Rev	Amendment	By	Date
PL0	ISSUED FOR PLANNING	IBS	2020/03/16
PL1	ISSUED FOR PLANNING	IBS	2021/01/18

Client:
HYDE PARK COMMUNITY SPORTS CENTRE TRUST

Job: HYDE PARK COMMUNITY SPORTS CENTRE
Title: STANDARD DETAILS SH.2

PUNCH consulting engineers
Dublin|Limerick|Cork|Galway|Glasgow
Carnegie House, Library Road, Dun Laoghaire, Co. Dublin, A96 C7W7
IRL: +353 1 271 2200 www.punchconsulting.com

Stage: PLANNING
Scale @ A1: AS SHOWN
Technician Check: JB
Engineer Check: MCD
Approved: PC
Drawing No: 192104-011
Rev: PL1

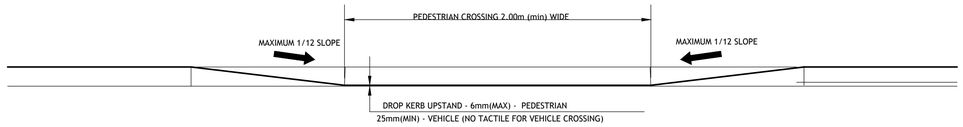

TYPICAL ELEVATION OF DROPPED KERB (DK)

1:20

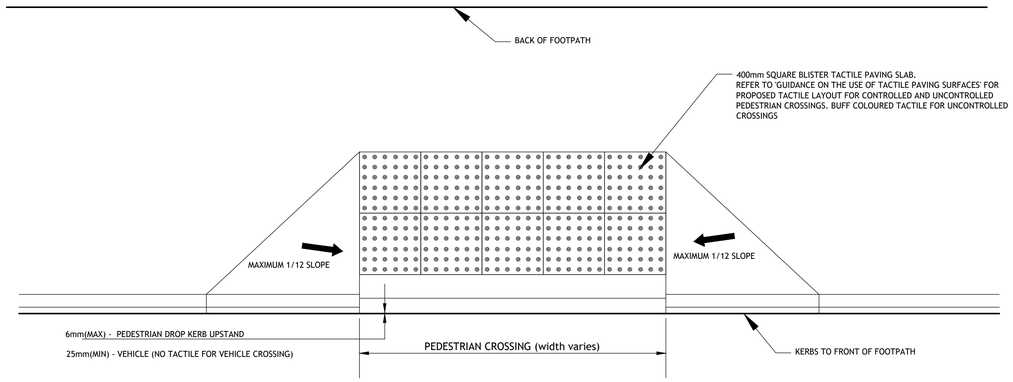

TYPICAL PLAN OF DROP KERB (DK)

N.T.S

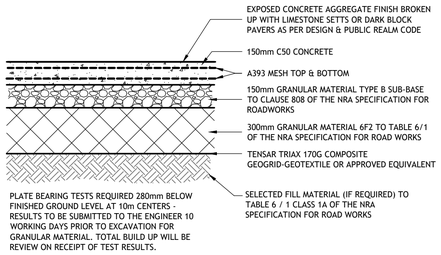

CONCRETE FOOTPATH BUILD-UP (TRAFFICKED AREAS)

SCALE 1:20

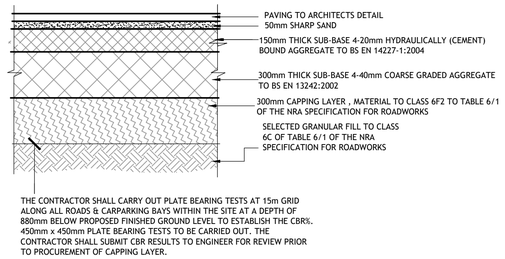

PERMEABLE PAVING BUILD-UP DETAIL

SCALE 1:20

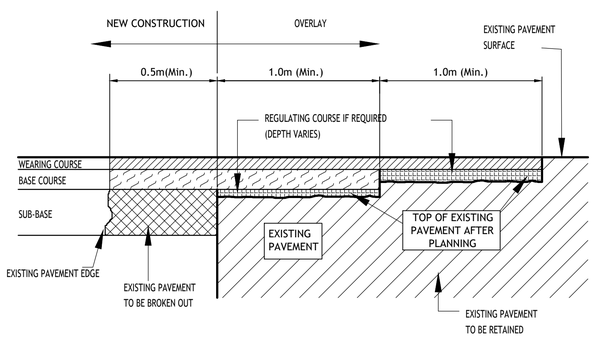

TRANSVERSE JOINT BETWEEN PROPOSED FLEXIBLE PAVEMENT & EXISTING ROAD

SCALE NTS

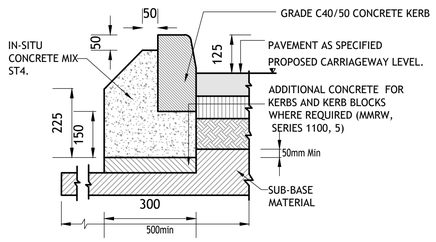

TYPICAL CARPARK KERB DETAIL

NOT TO SCALE

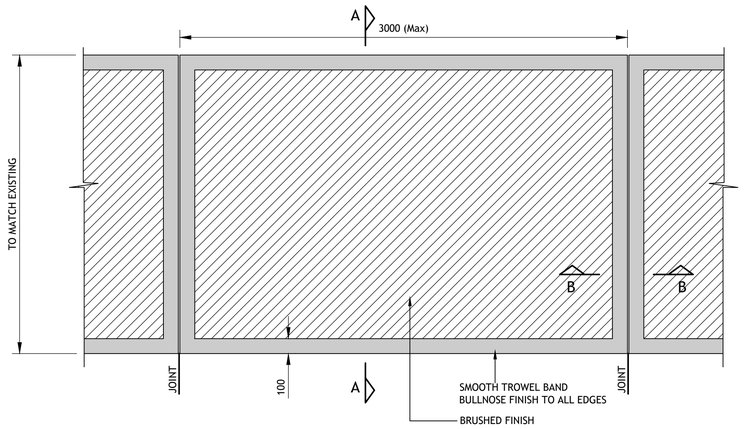

PLAN - CONCRETE FOOTPATH

SCALE 1:25

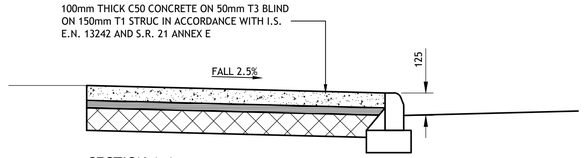

SECTION A-A

SCALE 1:25

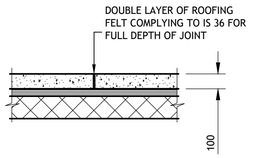

SECTION B-B (JOINT DETAIL)

SCALE 1:25

NOTES :

1. AT VEHICULAR ACCESS POINTS CONCRETE TO BE REINFORCED WITH A393 MESH TOP & BOTTOM
2. ALL CONCRETE EDGES AND JOINTS SHALL HAVE BULLNOSED TROWEL FINISH

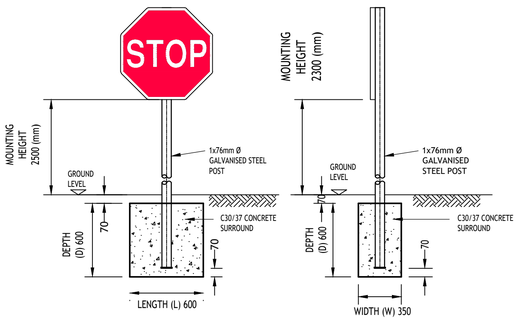

TYPICAL SINGLE POST SIGN

Scale 1:25

COLOUR DRAWING ☒

Date Drawn: SEPT 2019
Drawn By: DP
Date Issued:
Issued By:

Rev	Amendment	By	Date
PL0	ISSUED FOR PLANNING	IBS	2020/03/16
PL1	ISSUED FOR PLANNING	IBS	2021/01/18

Client:

HYDE PARK COMMUNITY SPORTS CENTRE TRUST

Job: HYDE PARK COMMUNITY SPORTS CENTRE
Title: STANDARD DETAILS SH.3

PUNCH consulting engineers
Dublin|Limerick|Cork|Galway|Glasgow
Carnegie House, Library Road, Dun Laoghaire, Co. Dublin, A96 C7W7
IRL: +353 1 271 2200 www.punchconsulting.com

Stage: PLANNING
Scale @ A1: AS SHOWN
Technician Check: JB
Engineer Check: MCD
Approved: PC
Drawing No: 192104-012
Rev: PL1