Title: HYDROBRAKE MANHOLE

Dwg No: TYP-C-015

Scale@A3: 1 : 25

Notes: SEE DRAINAGE PLAN FOR DISCHARGE LIMIT

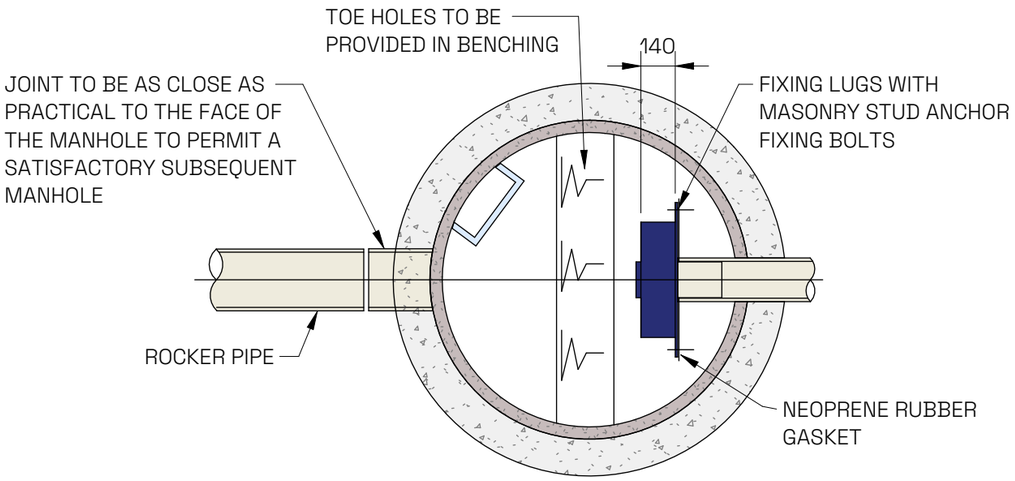

PLAN AT BENCHING LEVEL

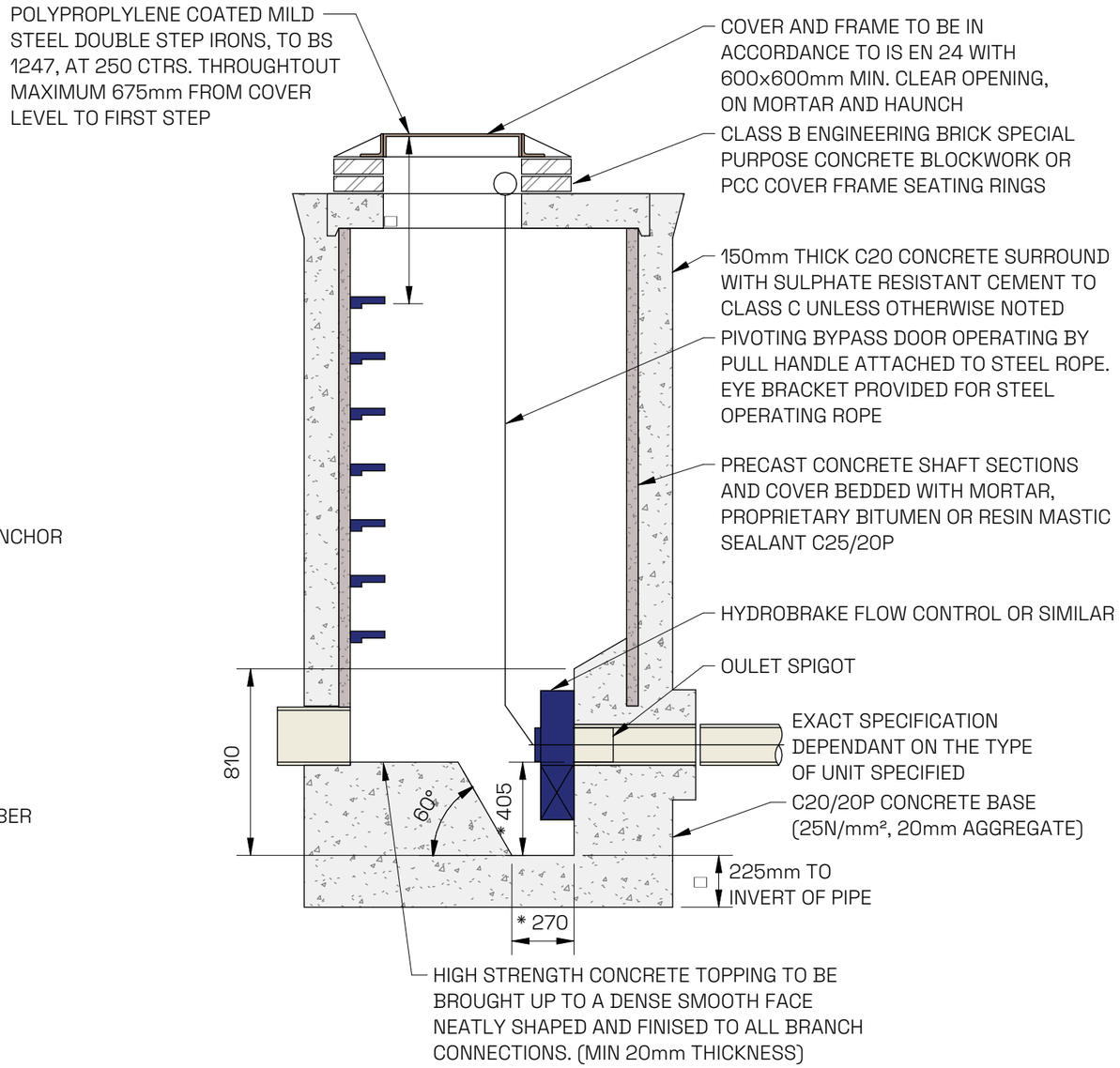

SECTION